Regulations require RAs to survive an isosceles-triangle-shaped blast pressure of 15 psi with a duration of 0.2 sec

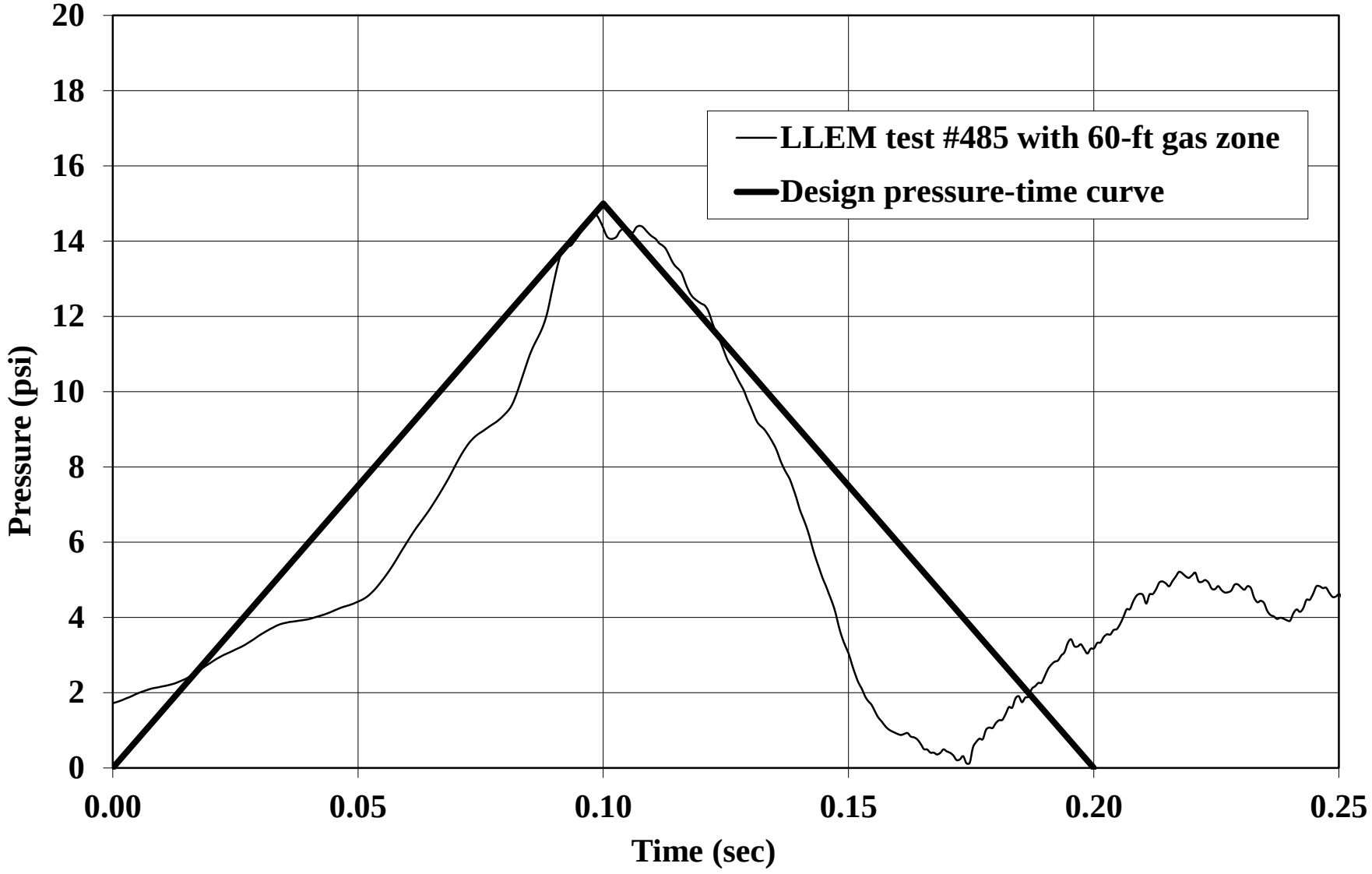

The 15-psi peak pressure is based on blast survivability information from military sources

Peak Overpressure	Maximum Wind Speed	Effect on Structures	Effect on the Human Body
6.9 kPa (1 psi)	61 kph (38 mph)	Window glass shatters.	Light injuries from fragments occur.
13.8 kPa (2 psi)	113 kph (70 mph)	Moderate damage to houses occurs (windows & doors blown out, severe roof damage).	People are injured by flying glass and debris.
20.7 kPa (3 psi)	164 kph (102 mph)	Residential structures collapse.	Serious injuries are common, fatalities may occur.
34.5 kPa (5 psi)	262 kph (163 mph)	Most bldgs collapse.	Injuries are universal, fatalities are widespread.
68.9 kPa (10 psi)	473 kph (294 mph)	Reinforced concrete bldgs are severely damaged or demolished.	Most people are killed.
137.9 kPa (20 psi)	807 kph (502 mph)	Heavily built concrete bldgs are severely damaged or demolished.	Fatalities approach 100%.

Zipf, R.K., Cashdollar, K.L., "Effects of blast pressure on structures and the human body", NIOSH accessed 9/14/2018.
https://www.cdc.gov/niosh/docket/archive/pdfs/NIOSH-125/125-ExplosionsandRefugeChambers.pdf

Structural response to a blast is oscillatory in nature

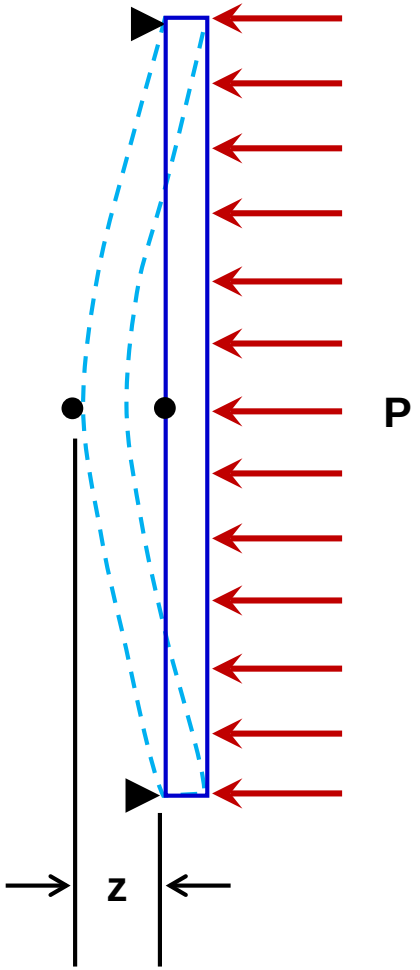

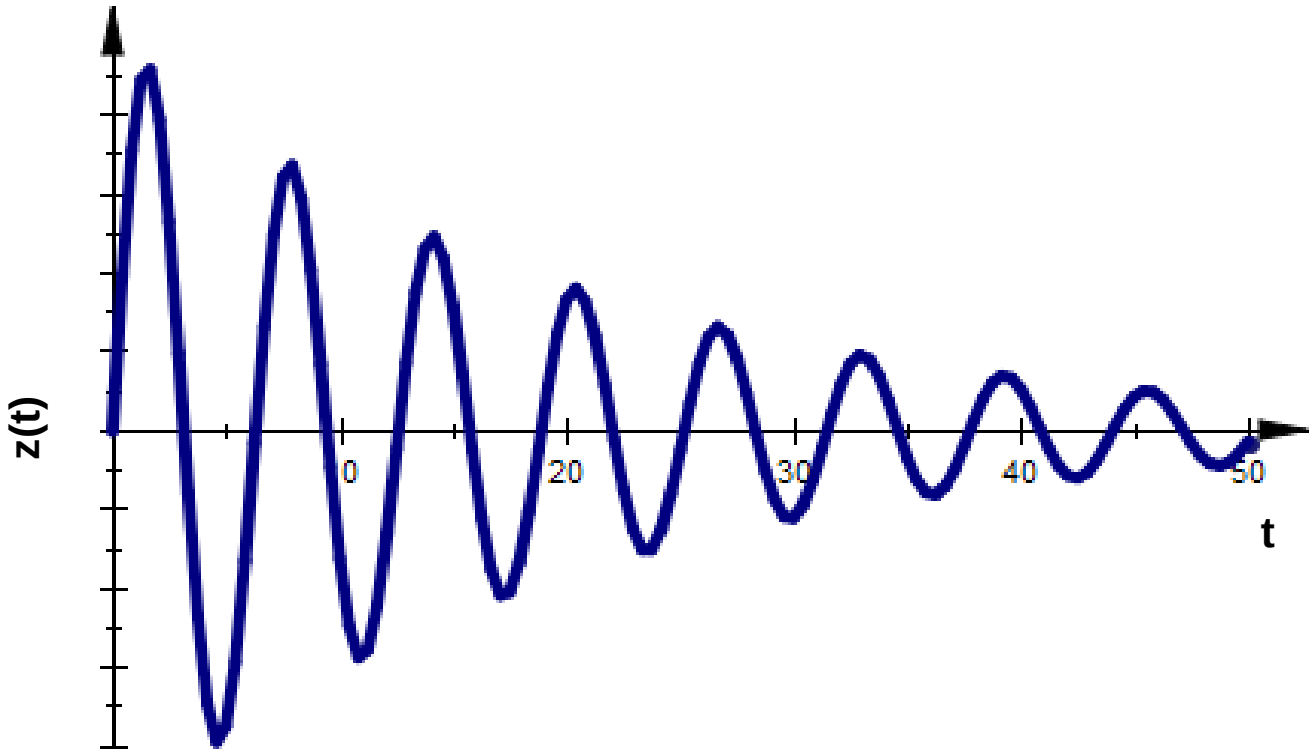

To simplify blast response analysis, a single-degree-of-freedom analysis can be used

- The structure's fundamental vibration mode is used to determine an equivalent mass and stiffness
- An *equivalent mass* is defined based on the "dynamic mass" of the structure's fundamental mode
- An *equivalent stiffness* is defined based on the "dynamic stiffness" of the structure's fundamental mode
- The response of the equivalent SDOF system can be calculated to determine the response

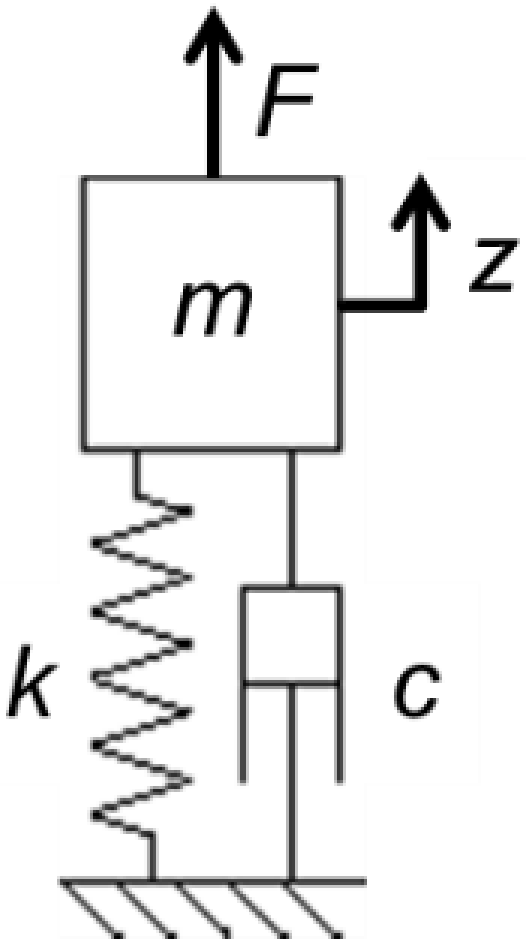

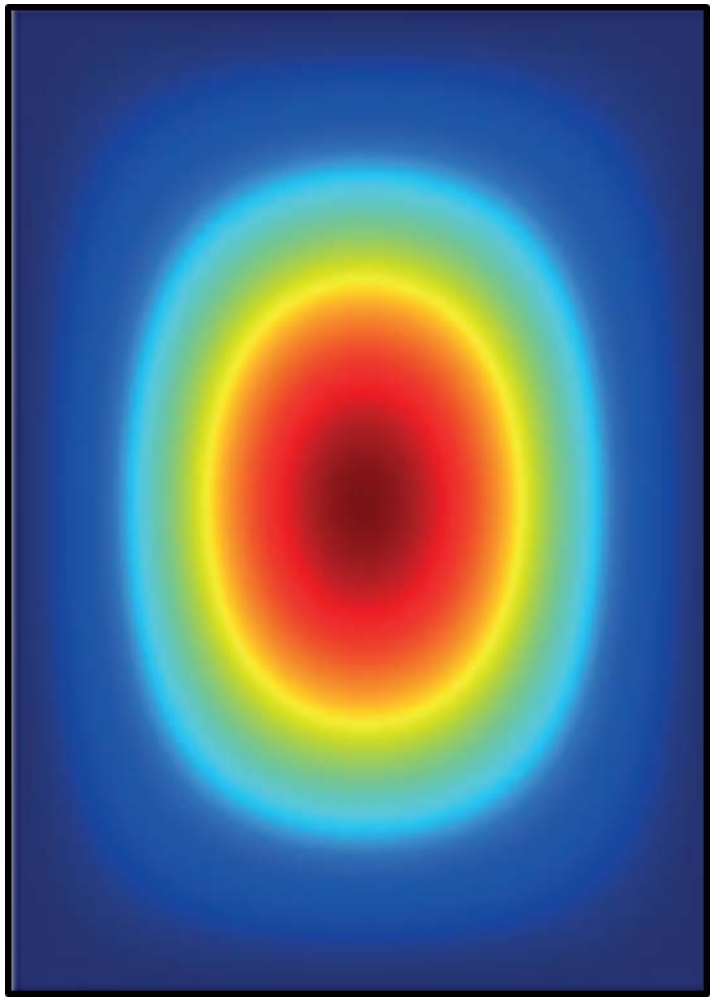

To further simplify the blast response analysis, the concept of dynamic load factor (DLF) can be used

- The *DLF* is defined as the ratio of the dynamic response to a dynamic load divided by the static response to a static load of the same magnitude

$$DLF = \frac{z}{z_{st}}$$

- The results of a static test or analysis can be scaled by the DLF to estimate the dynamic response
- The *DLF* depends on the ratio of the blast duration *(t_d)* to the natural period of the structure *(T)*

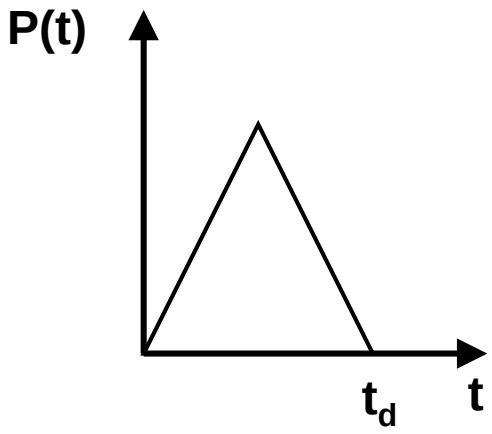

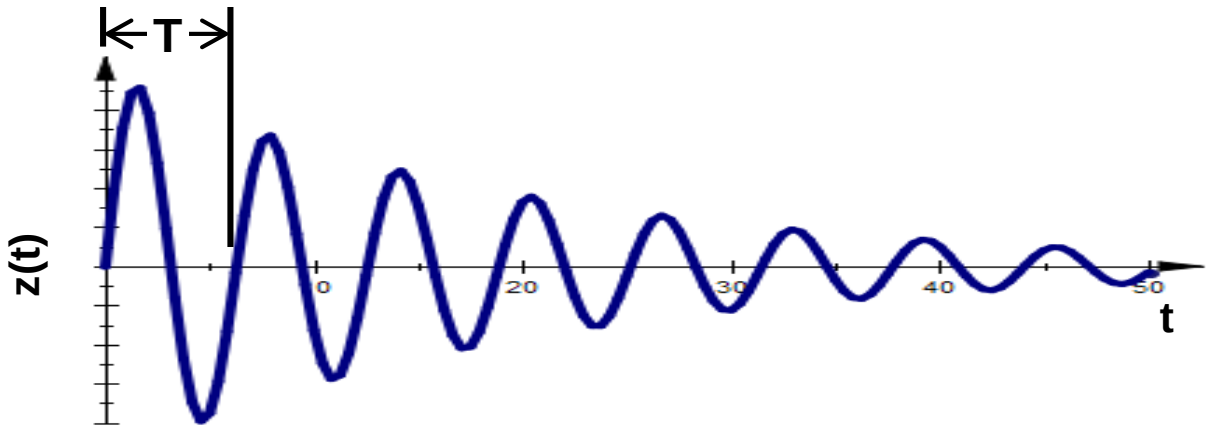

Biggs, J.M. (1964). *Introduction to Structural Dynamics.* New York, NY: McGraw-Hill Book Company.

To further simplify the blast response analysis, the concept of dynamic load factor (DLF) can be used

- The *DLF* also depends on the shape of the simplified blast pressure time-history

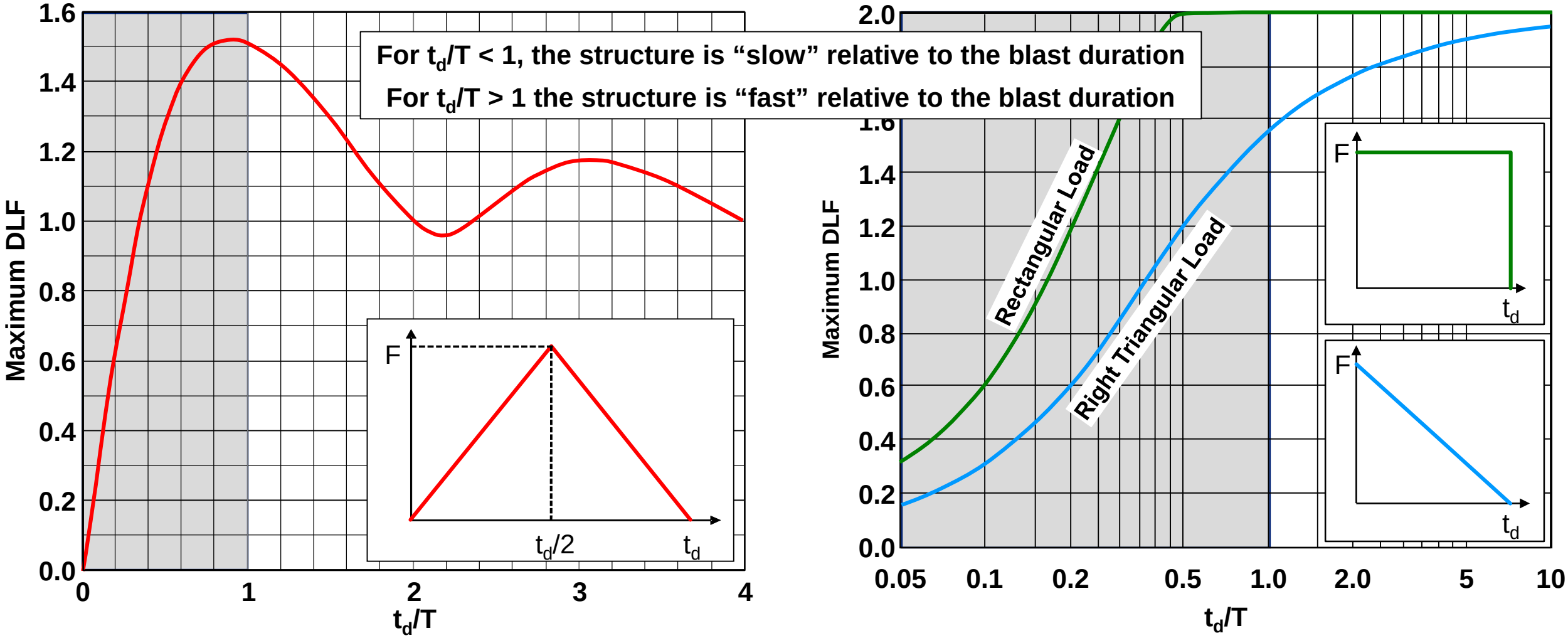

Biggs, J.M. (1964). *Introduction to Structural Dynamics.* New York, NY: McGraw-Hill Book Company.

The blast pressure near an RA may have a different peak pressure, rise time, duration, and shape than the isosceles-triangle-shaped design pressure

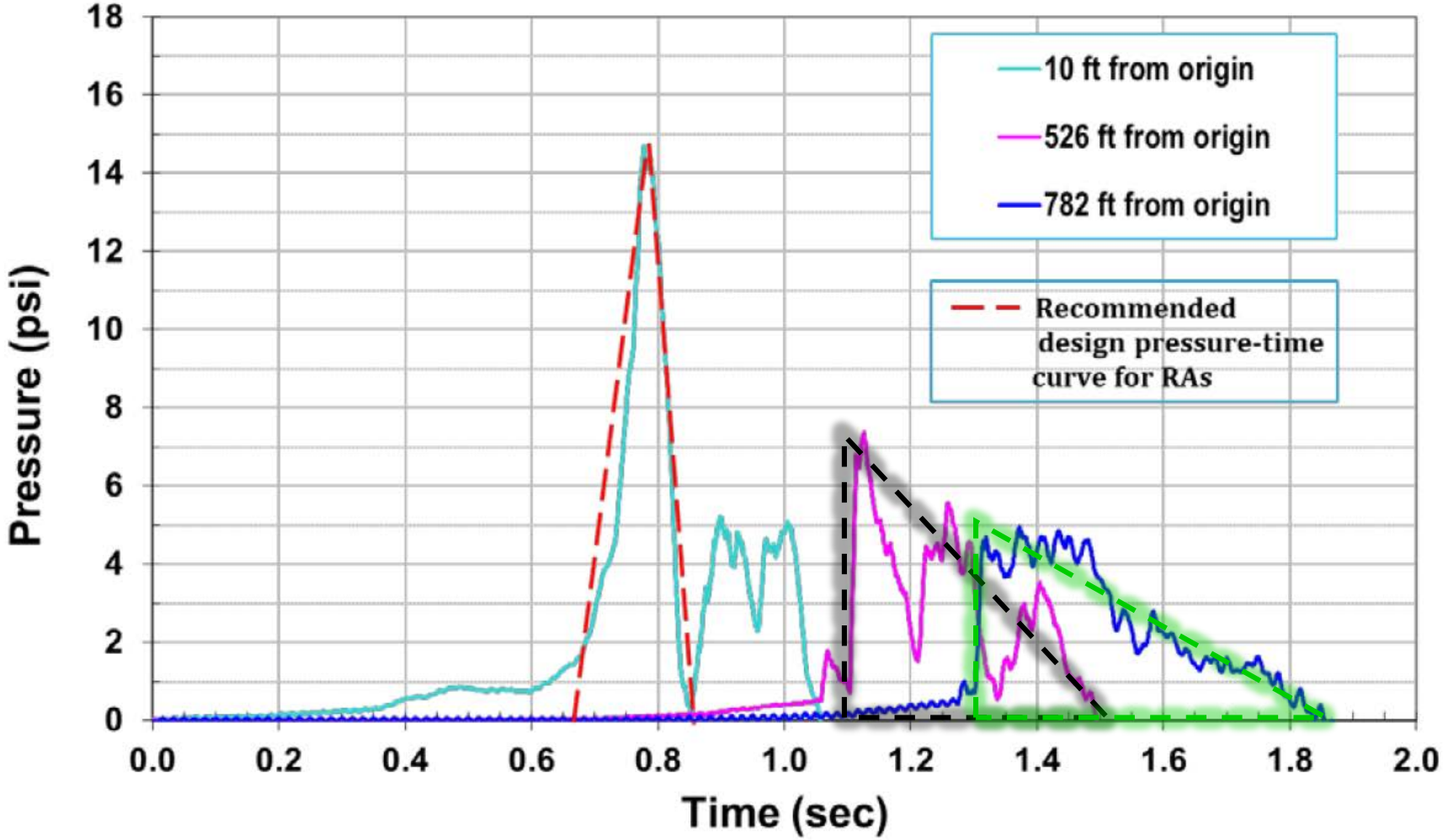

From RI 9698: Facilitating the Use of Built-in-place Refuge Alternatives in Mines

The blast pressure near an RA may have a different peak pressure, rise time, duration, and shape than the isosceles-triangle-shaped design pressure

- All three of these idealized blast pressures have a blast energy of 1500 psi-msec
- But, the structure will respond differently due to the shape of the blast and the structure's dynamic characteristics

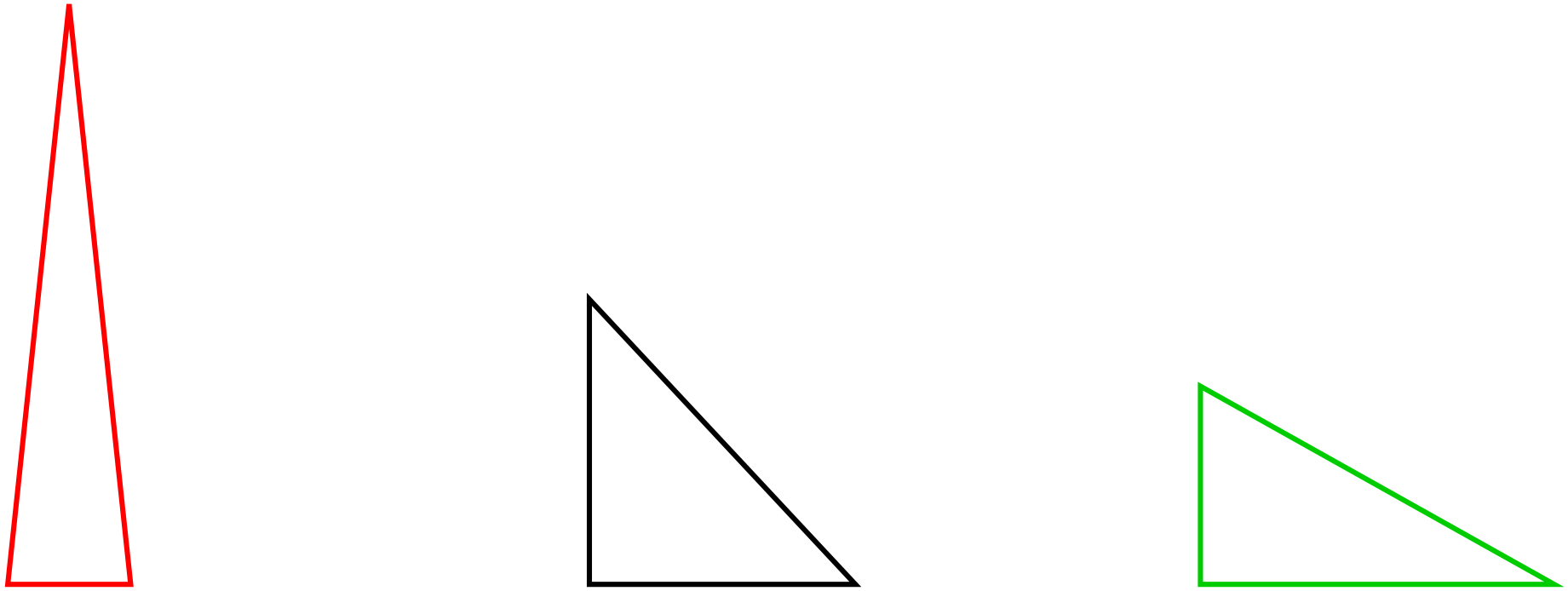

15 psi
0.2 sec

7.5 psi
0.4 sec

5 psi
0.6 sec

The blast pressure near an RA may have a different peak pressure, rise time, duration, and shape than the isosceles-triangle-shaped design pressure

- All three of these idealized blast pressures have a blast energy of 1500 psi-msec
- But, the structure will respond differently due to the shape of the blast and the structure's dynamic characteristics

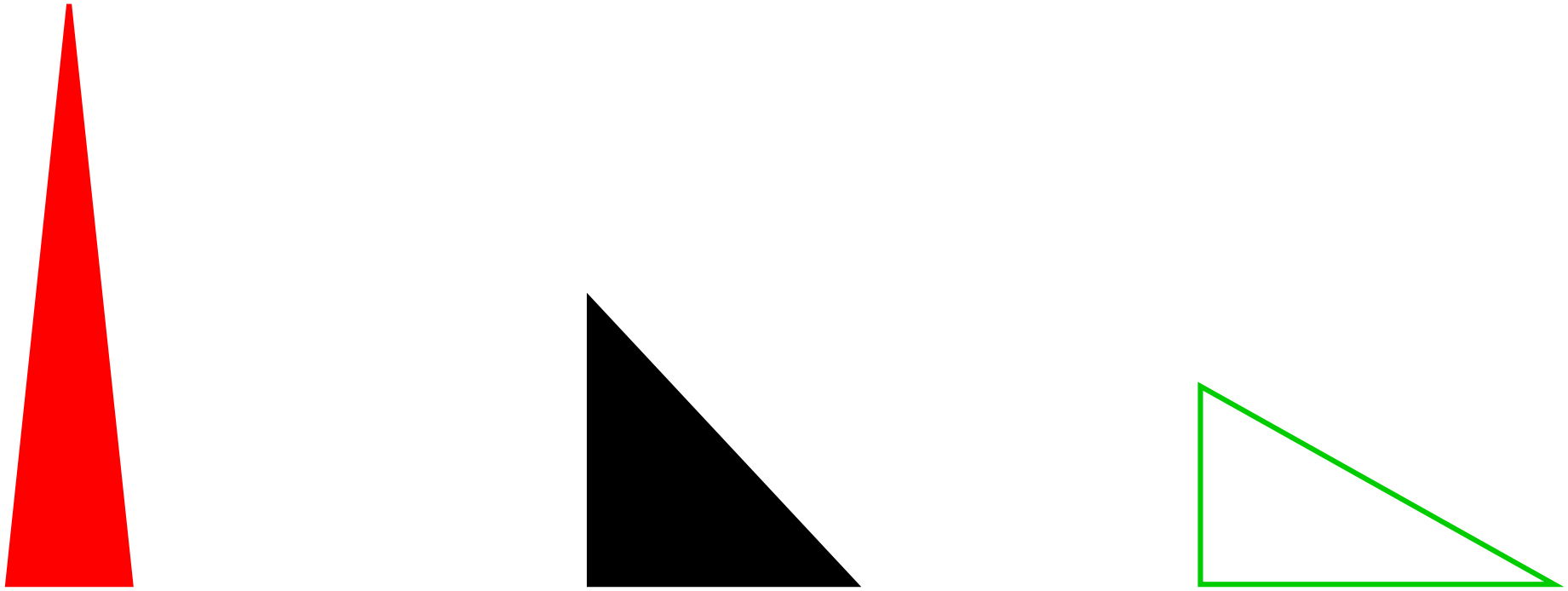

The two curves have the same blast energy, but the DLFs are different

- Assuming the structure has a natural period of 0.1 sec
  - The *DLF* for the 15-psi, 0.2-sec isosceles-triangle blast would be 1.0
  - The DLF for the 7.5 psi, 0.4-sec right-triangle blast would be ~1.9

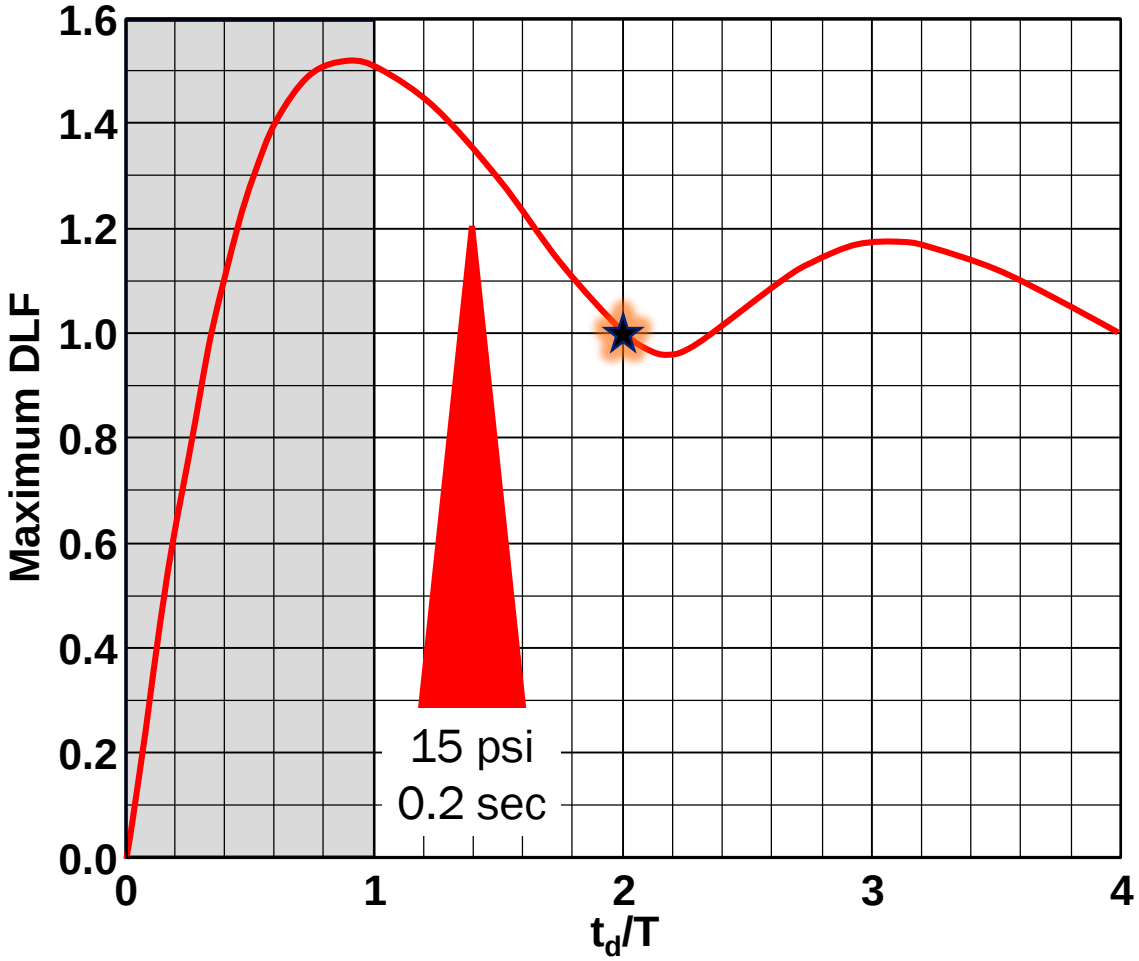

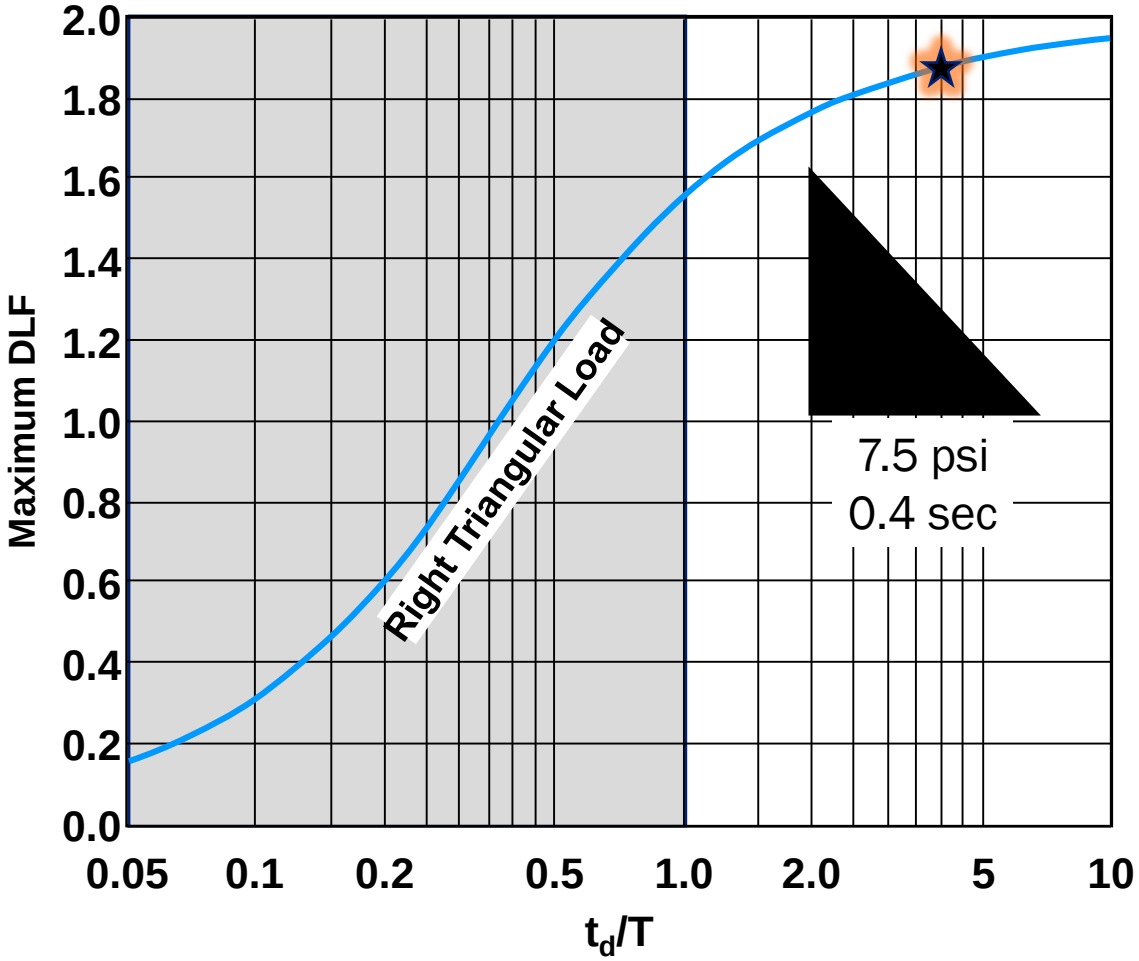

Biggs, J.M. (1964). *Introduction to Structural Dynamics.* New York, NY: McGraw-Hill Book Company.

Blast pressures may subject structures to both positive and negative loading

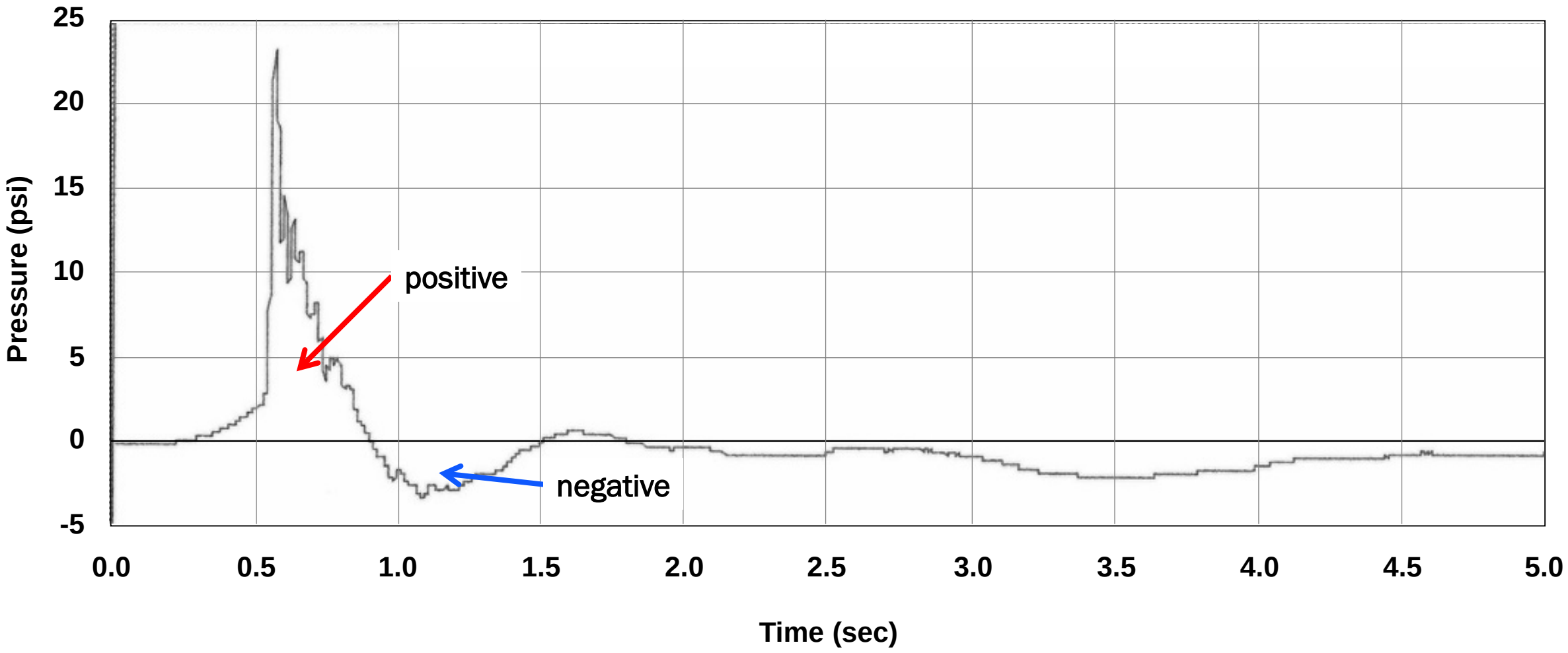

Sapko, M.J., Weiss, E.S., Trackemas, J., and Stephan, C.R., 2004, "Designs for rapid in situ sealing", Trans Soc Min Metall Explor 2004 Jan; 316:85-92. https://www.cdc.gov/niosh/mining/works/coversheet1087.html.

The negative pressure component is not a concern for BIP RA stoppings, but it is a serious concern for BIP RA doors

- Stoppings have same behavior for positive and negative loads
- Doors have different behavior for positive and negative loads
- All door components must withstand dynamic pressure
  - o Door “skin”
  - o Latching mechanism
  - o Hinges

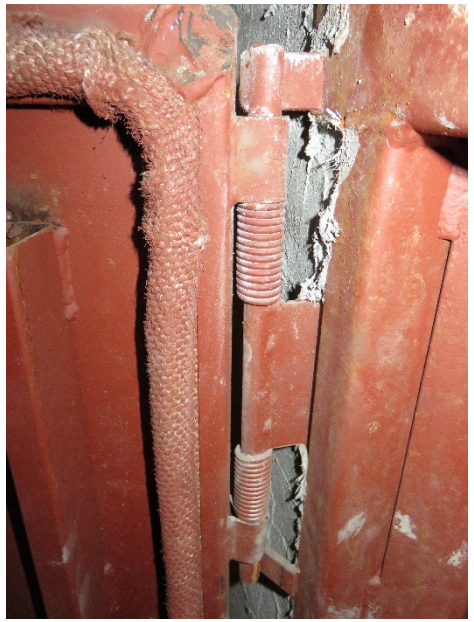

NIOSH is developing an approach to ensure BIP RA doors can withstand a survivable blast *without yielding*

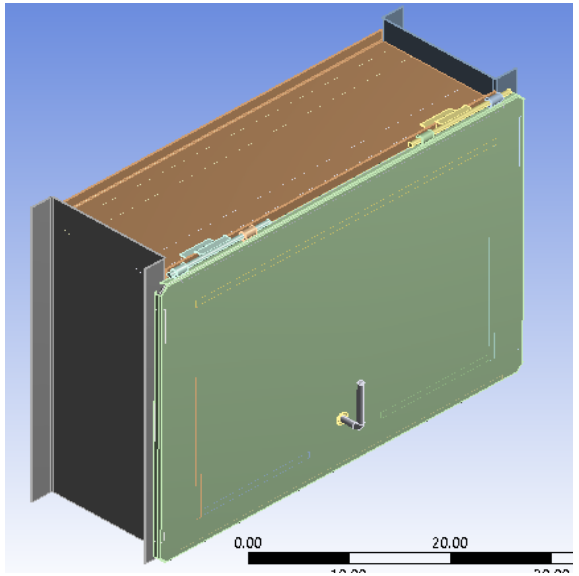

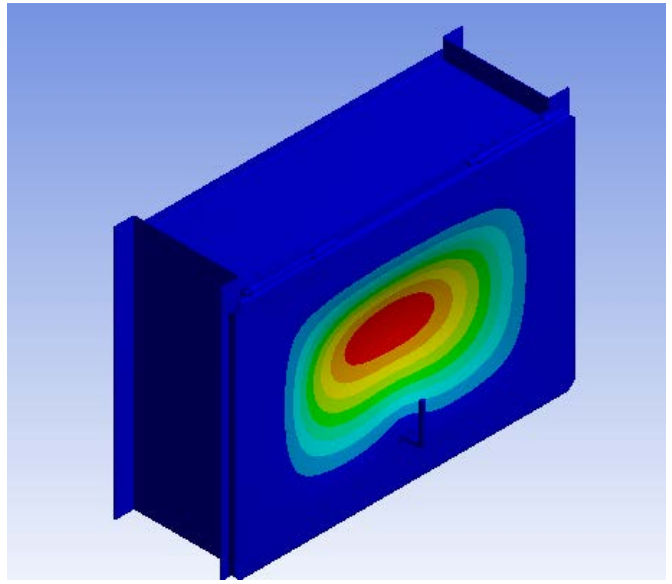

1. Conduct linear static finite element (FE) analysis
2. Validate and update linear static FE model using static load-deflection-strain test data
3. Conduct non-linear dynamic FE analysis on installed door
4. Validate and update non-linear dynamic FE model using static and dynamic test data and experimental modal analysis
5. Conduct full-scale blast tests on installed door

A linear static FE analysis was performed on a BIP RA door

- ASTM A36 steel was used for the door material properties (36,000 psi yield strength)

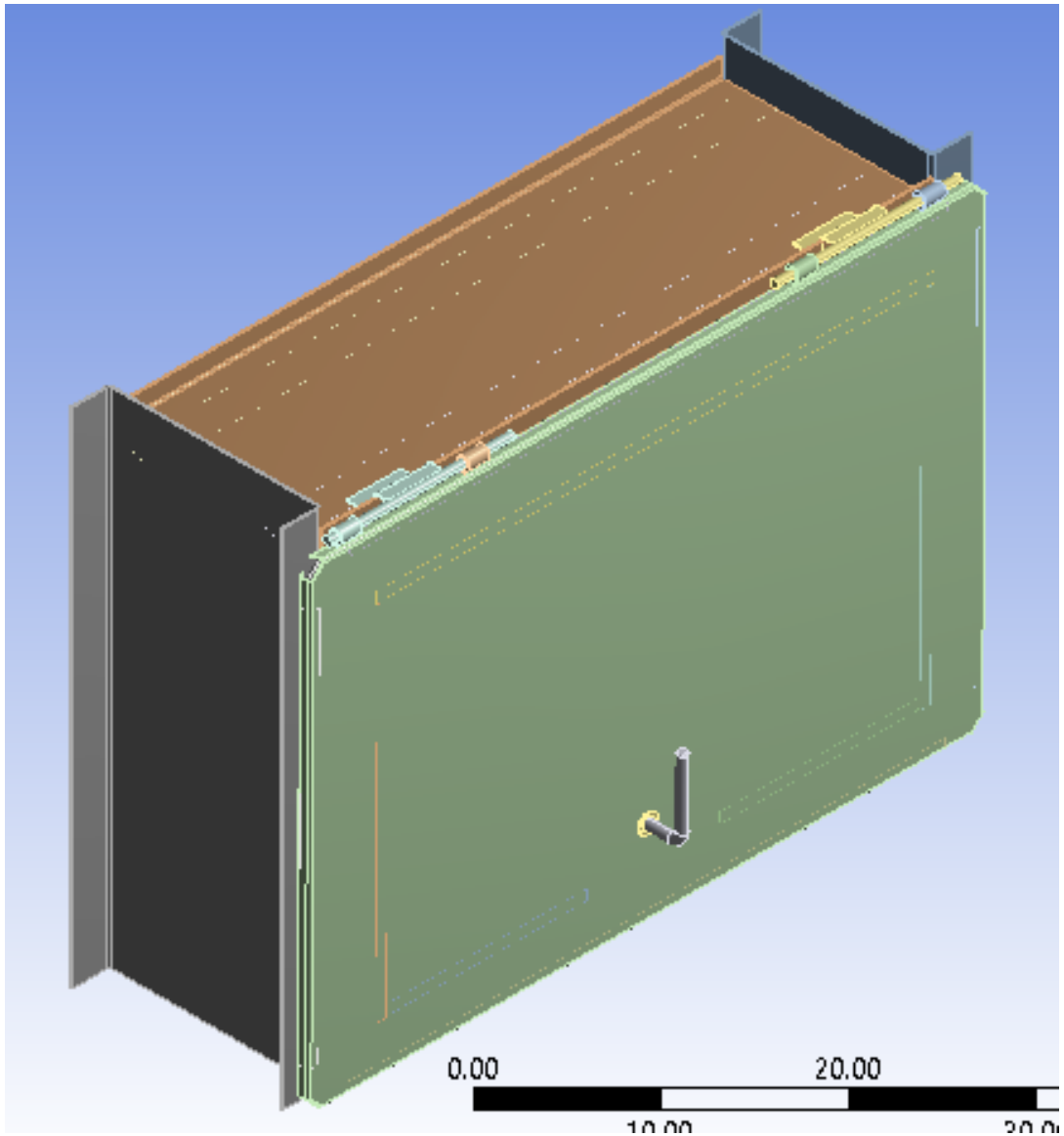

The model includes the hinges, handle-latch pin, latch plate, door skin stiffener, and seal

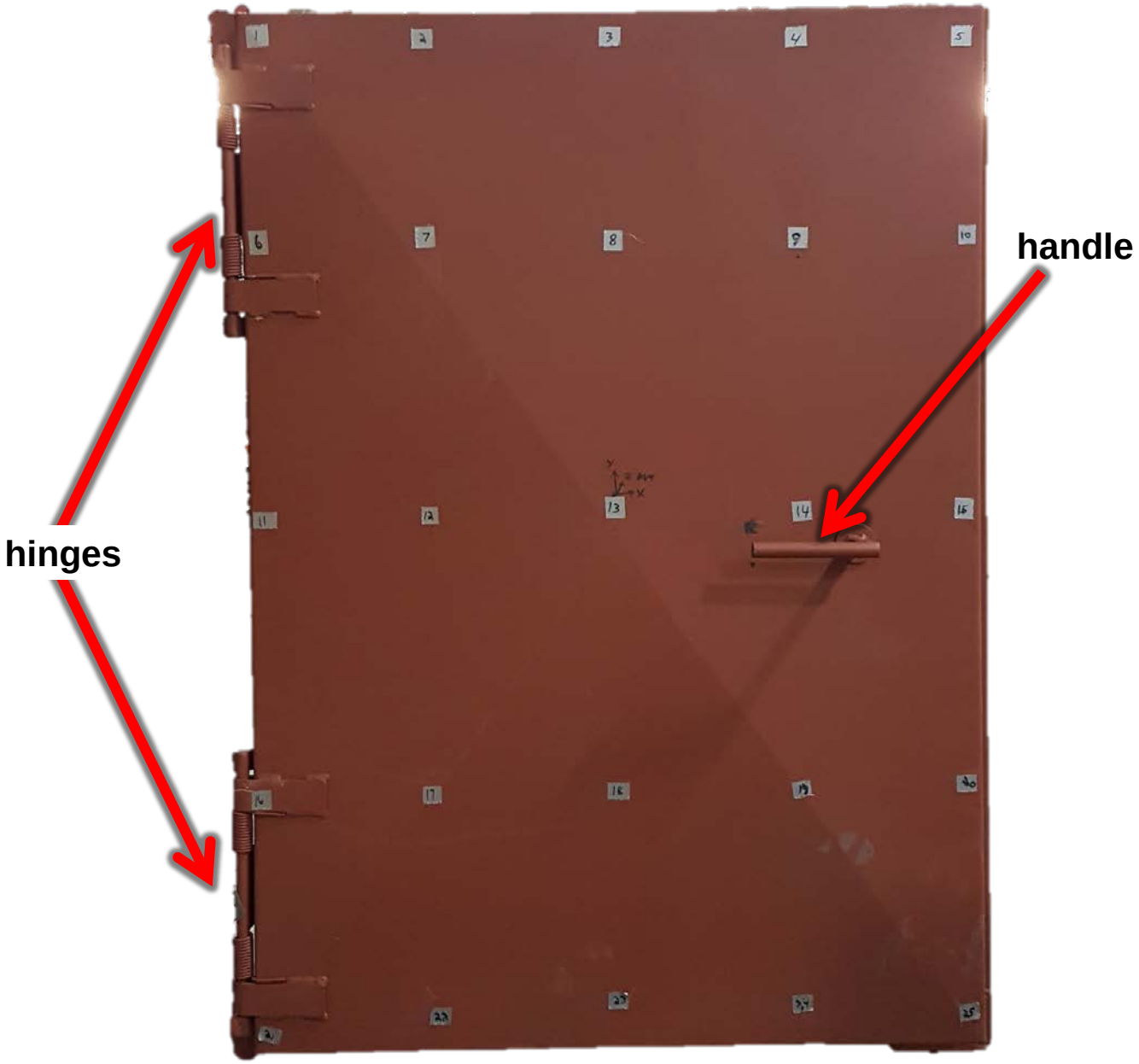

The model includes the hinges, handle-latch pin, latch plate, door skin stiffener, and seal

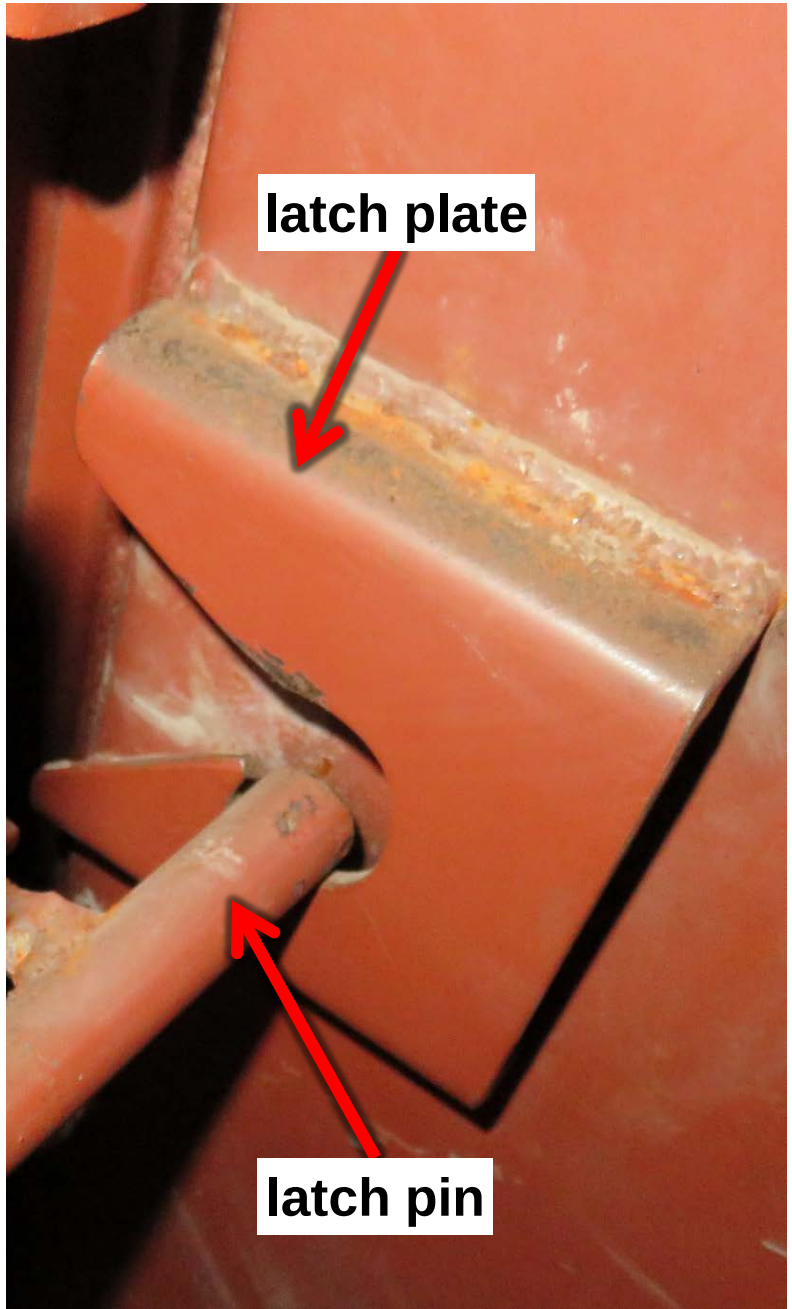

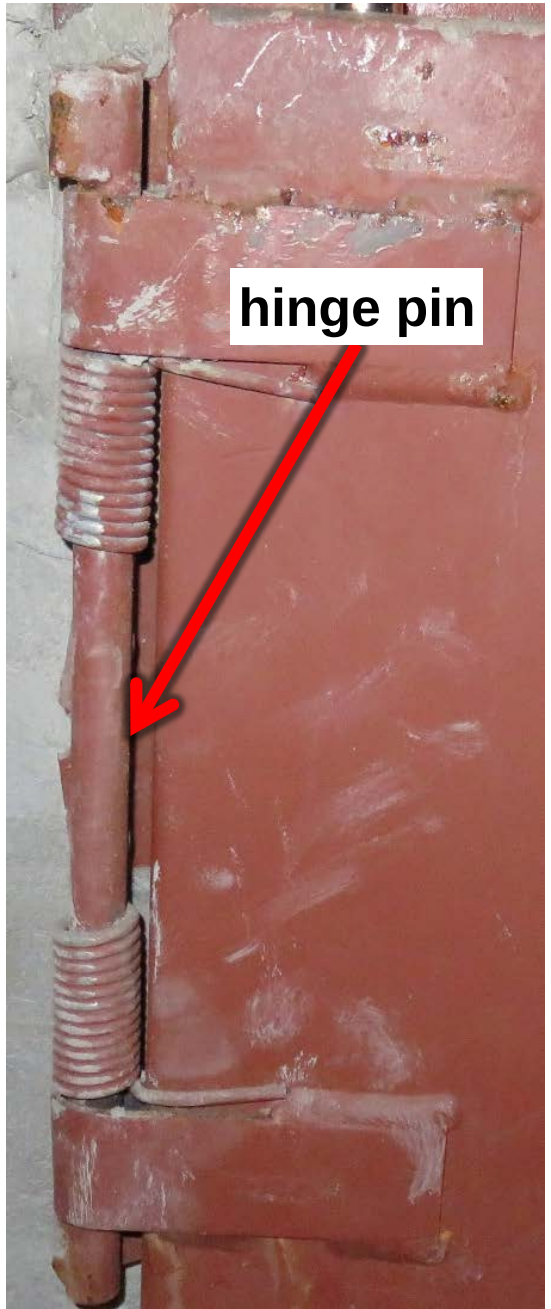

Several simplifications were made for modeling purposes

- The hinges were modeled to have sliding contact at the hinge pin-body interface
- The door handle-latch pin was modeled to be bonded to the latch plate
- The door seal was assumed to be neoprene rubber
- The x-shaped raised profile on the door skin was ignored
- The welds were ignored; welded components were modeled to have bonded contact
- The dynamic increase factor (DIF) for A36 was ignored
  - The DIF is the increase in strength for high strain rates, for A36 this ranges from about 1.0 to 1.6

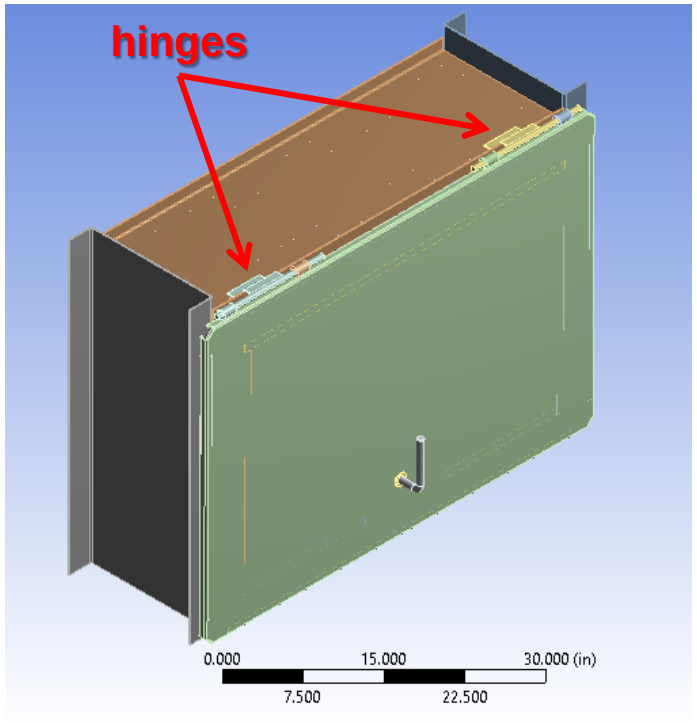

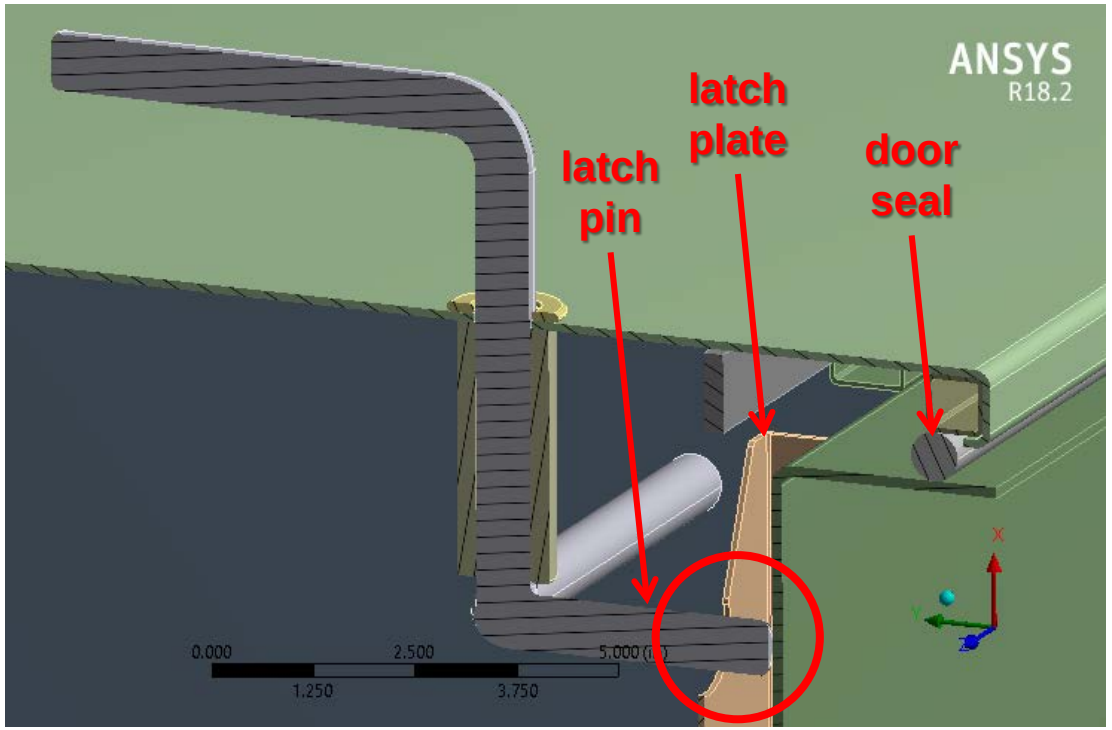

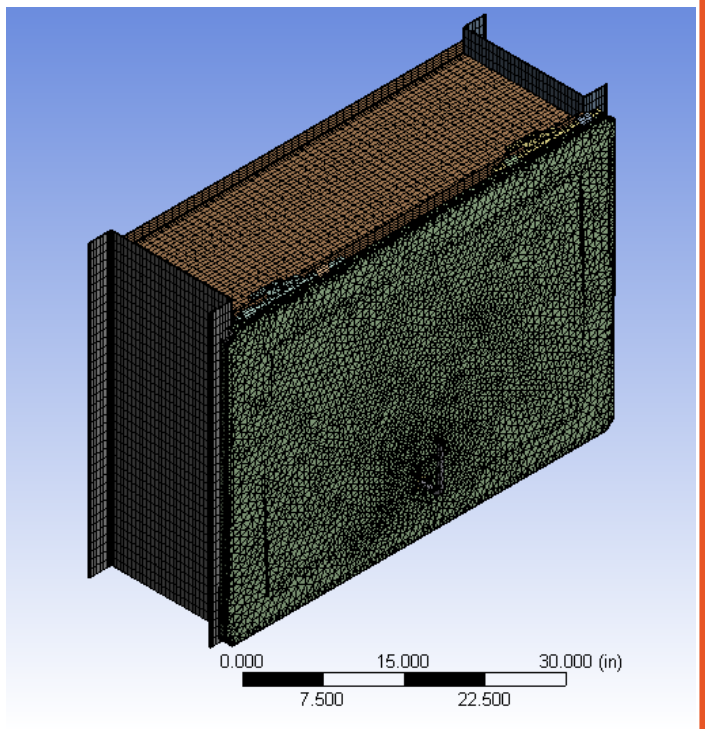

Two loading conditions were used: a positive 15-psi, 0.2-sec isosceles-triangle pressure, and a negative 3-psi, 0.5-sec isosceles-triangle pressure

- The natural period of the door was calculated from its effective mass and stiffness
- The DLF for each load was ~1.0

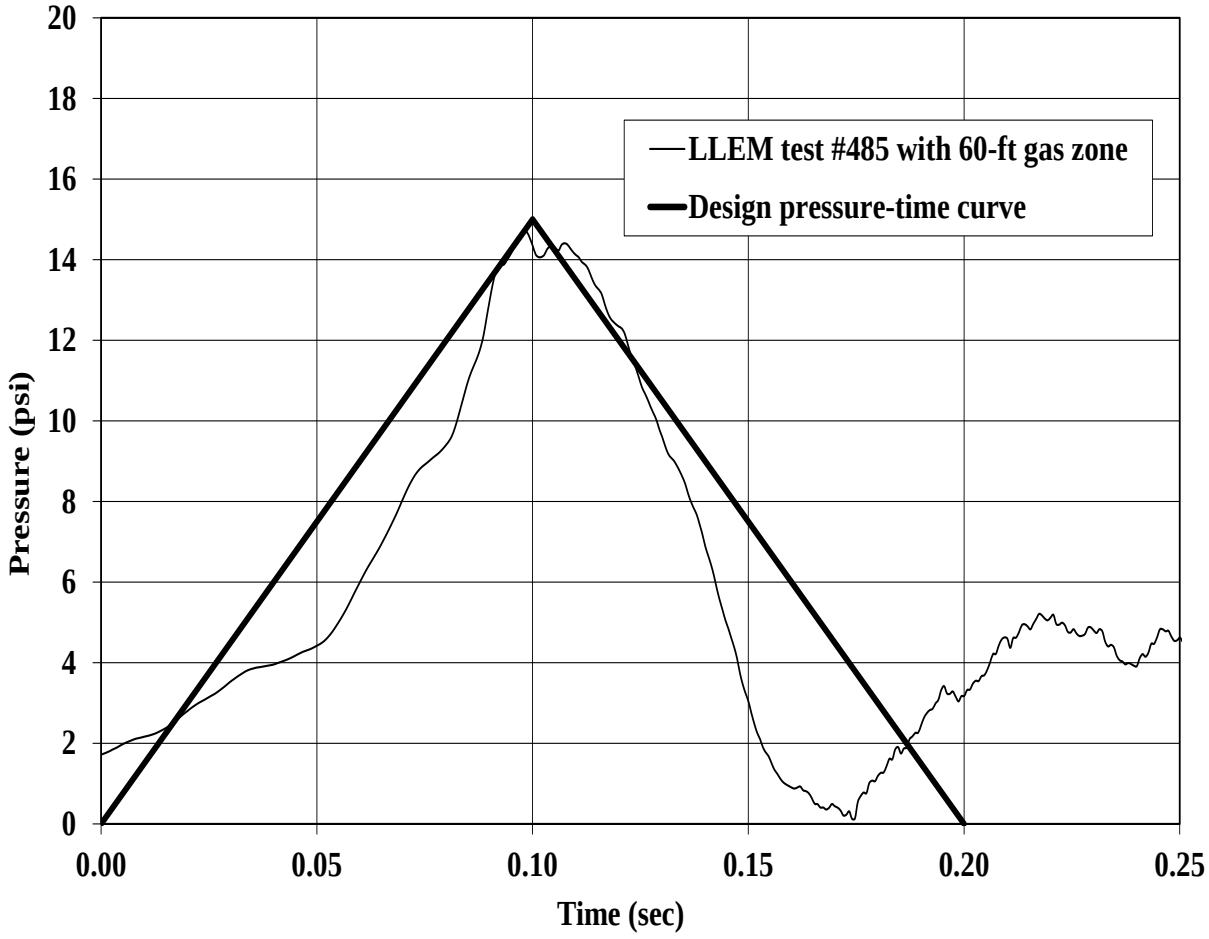

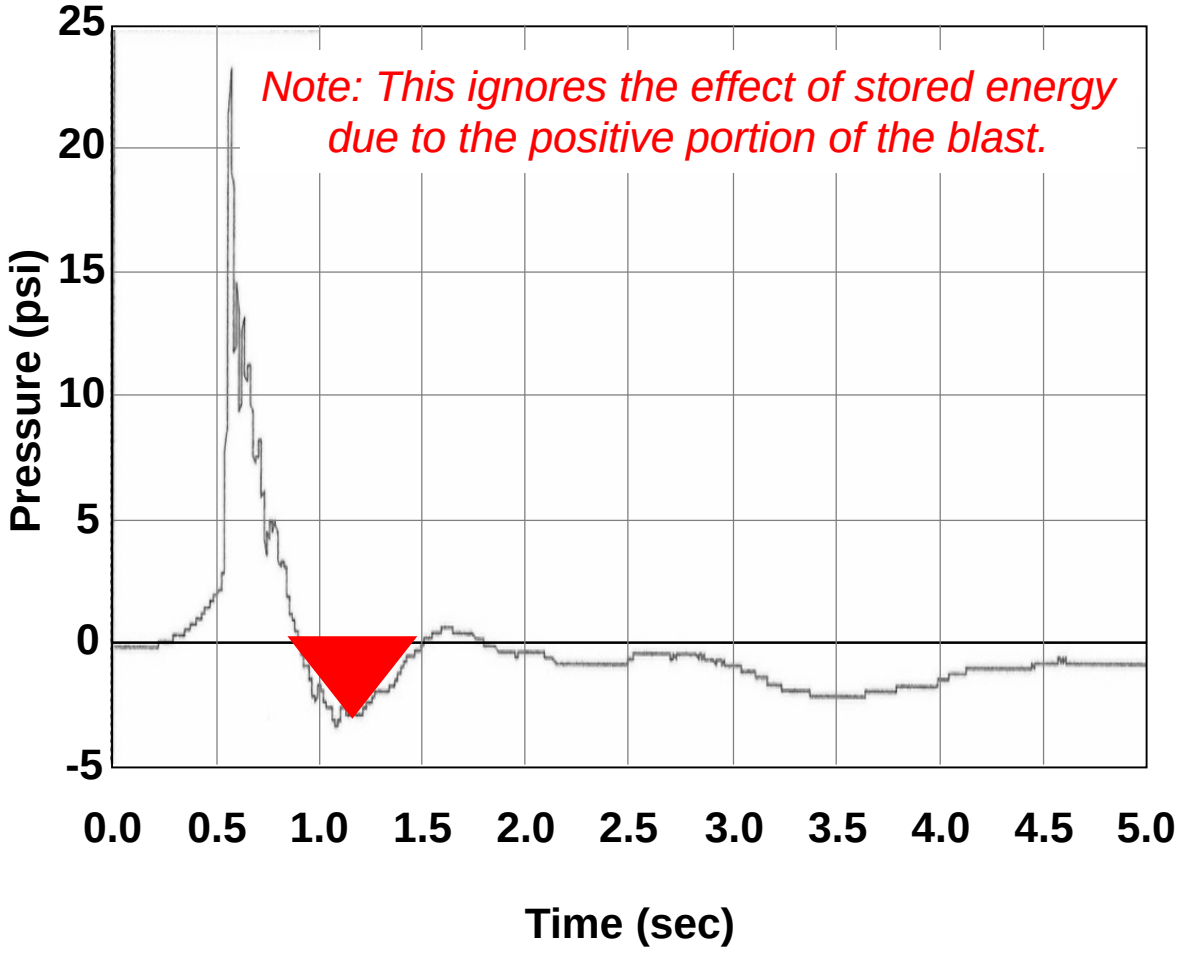

For the *15-psi positive pressure*, the maximum predicted displacement was roughly 4.75 inches

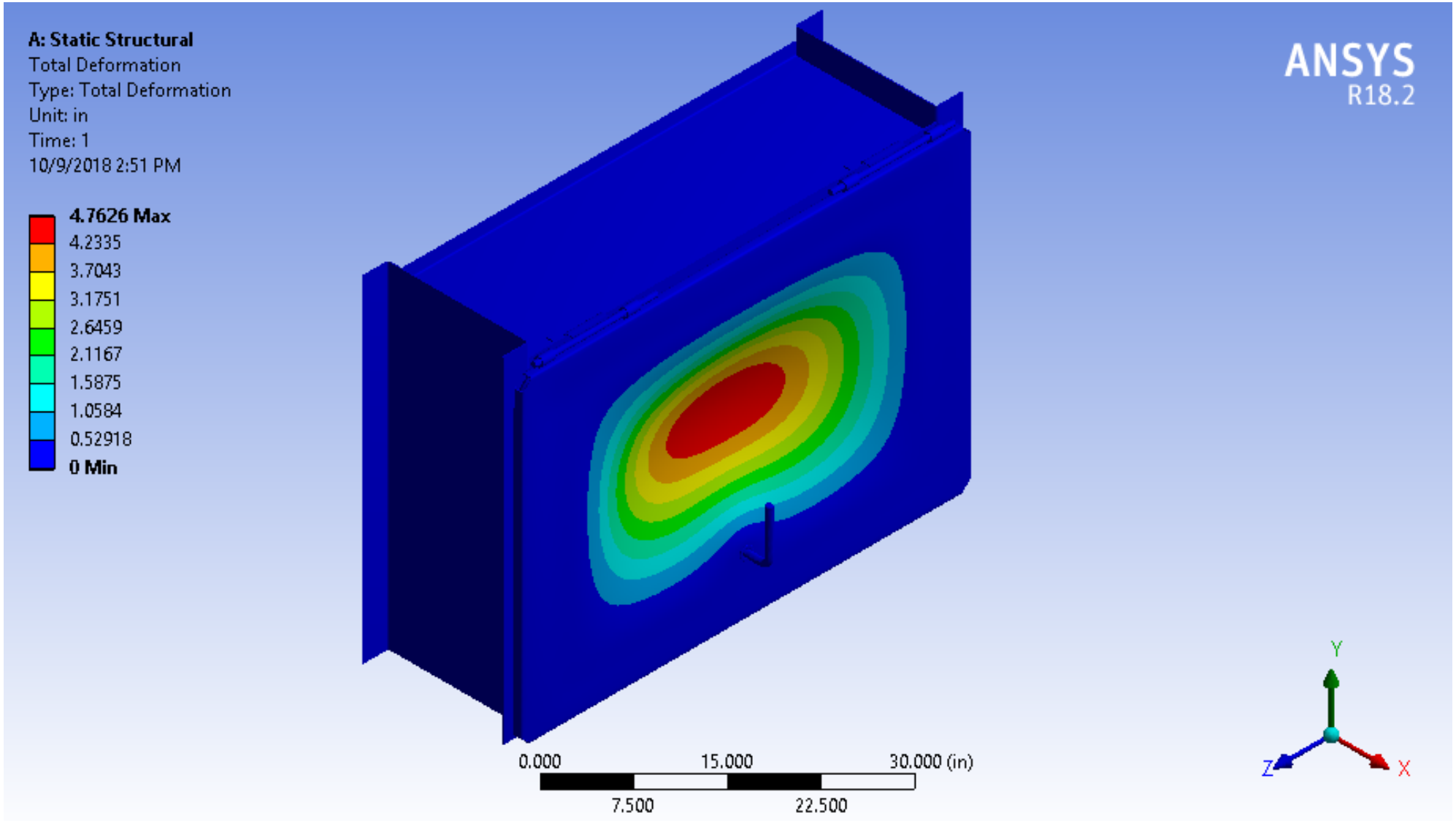

"This information is distributed solely for the purpose of pre dissemination peer review under applicable information quality guidelines. It has not been formally disseminated by the National Institute for Occupational Safety and Health, Centers for Disease Control and Prevention. It does not represent and should not be construed to represent any agency determination or policy."

For the *15-psi positive pressure*, nearly the entire door skin was predicted to yield (indicated by yellow, orange, or red)

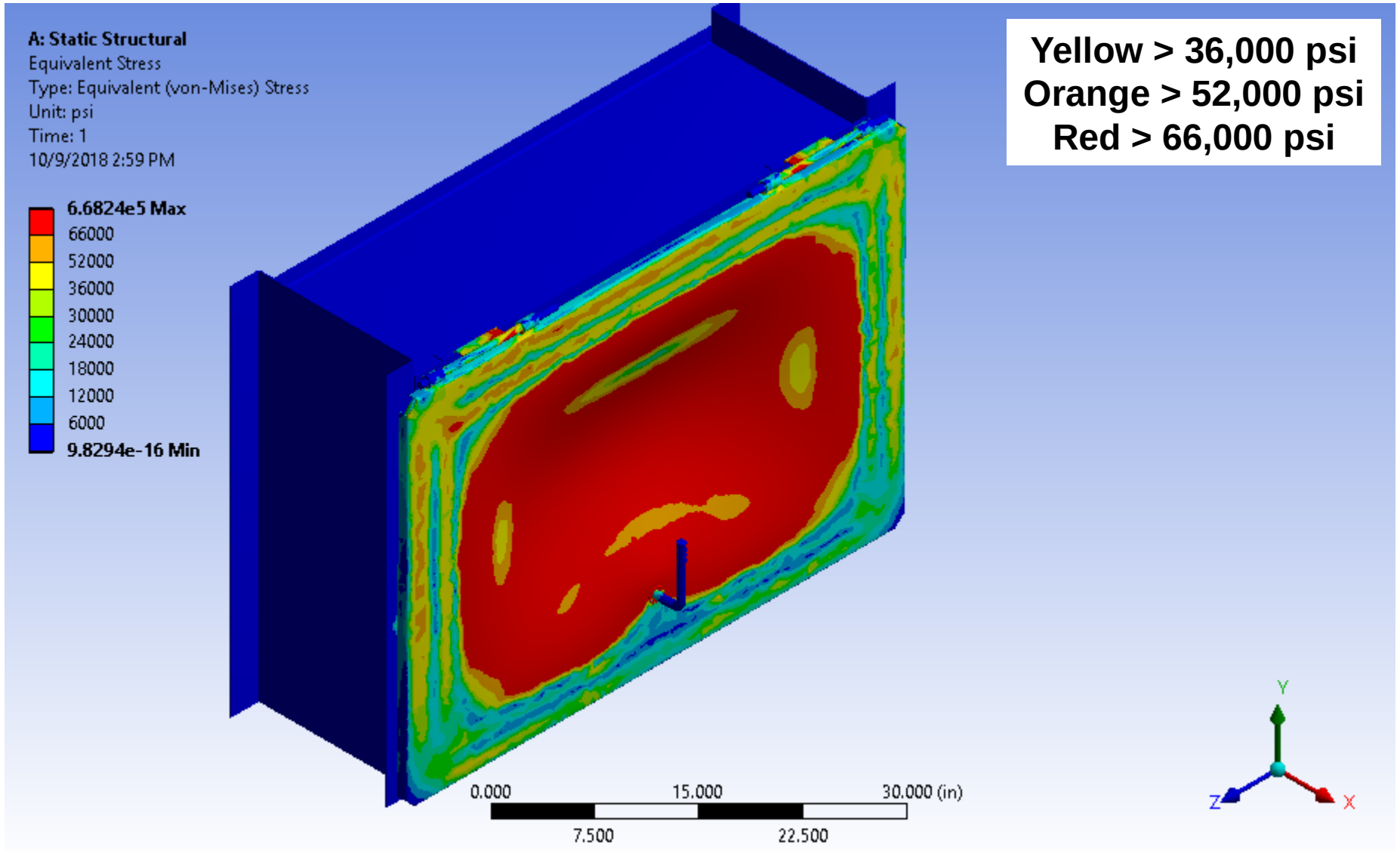

"This information is distributed solely for the purpose of pre dissemination peer review under applicable information quality guidelines. It has not been formally disseminated by the National Institute for Occupational Safety and Health, Centers for Disease Control and Prevention. It does not represent and should not be construed to represent any agency determination or policy."

For the *15-psi positive pressure*, both the latch pin and latch plate were predicted to yield

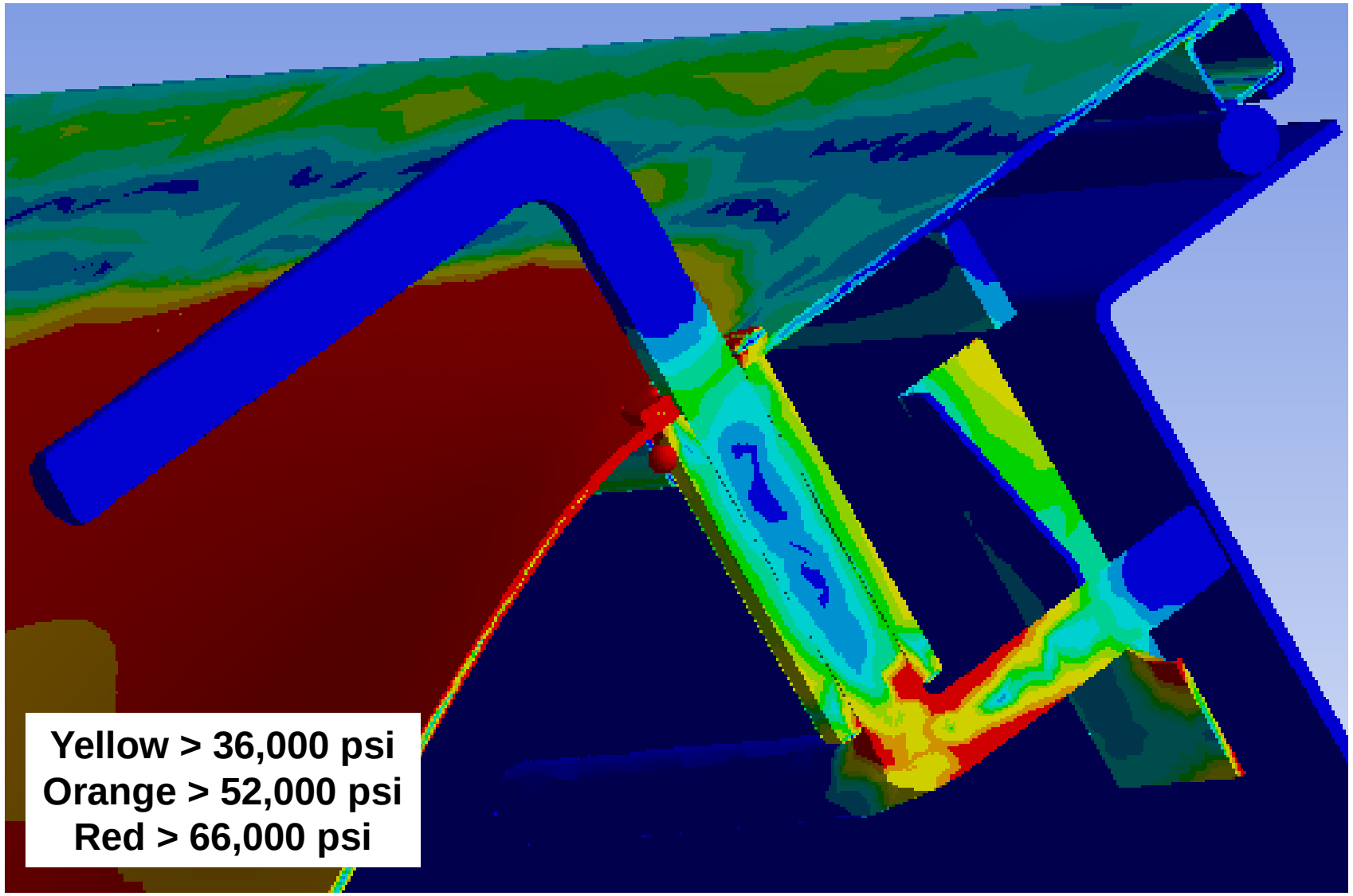

For the *15-psi positive pressure*, the hinge pins were predicted to yield

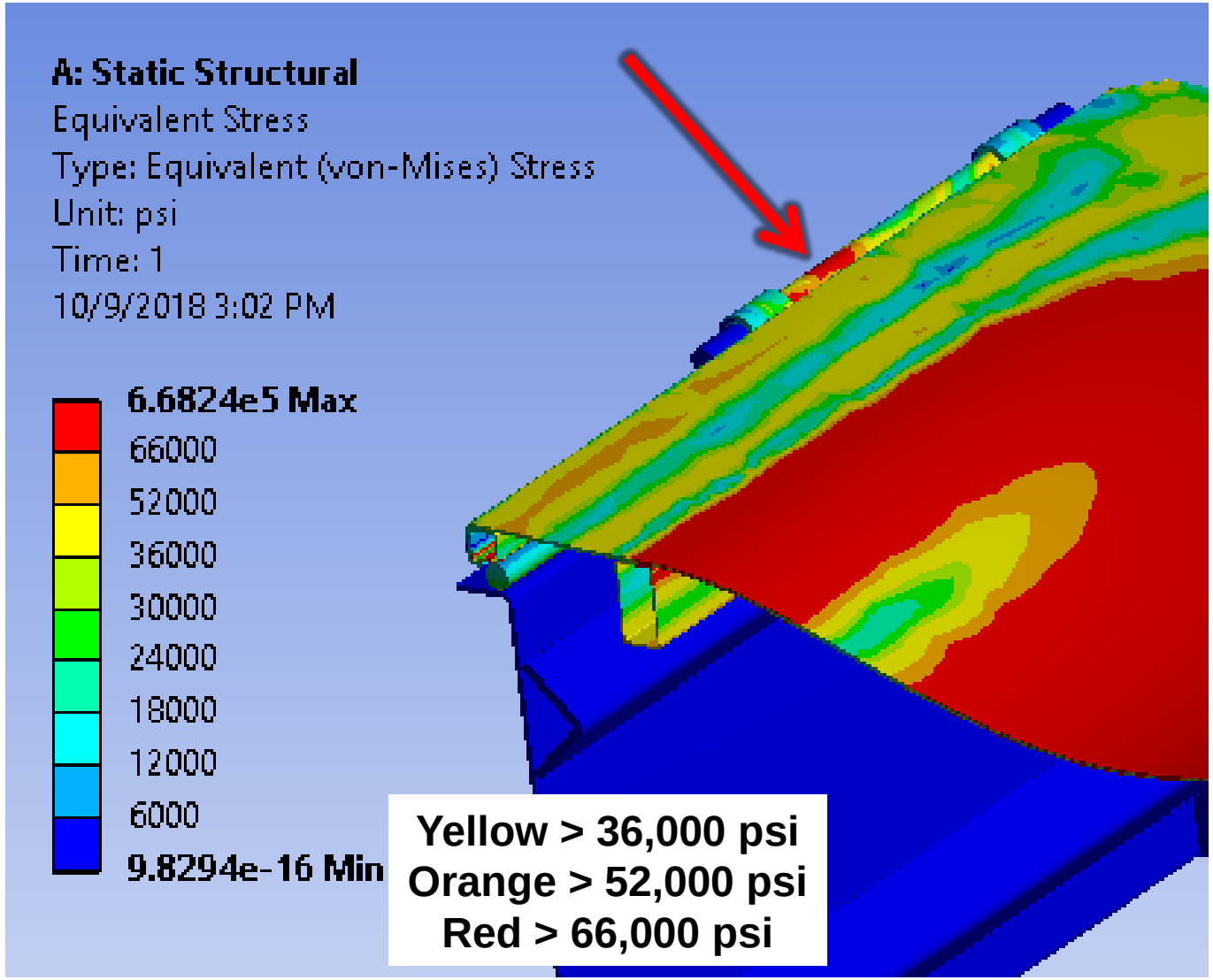

For the *3-psi negative pressure*, the maximum predicted displacement was roughly 1 inch

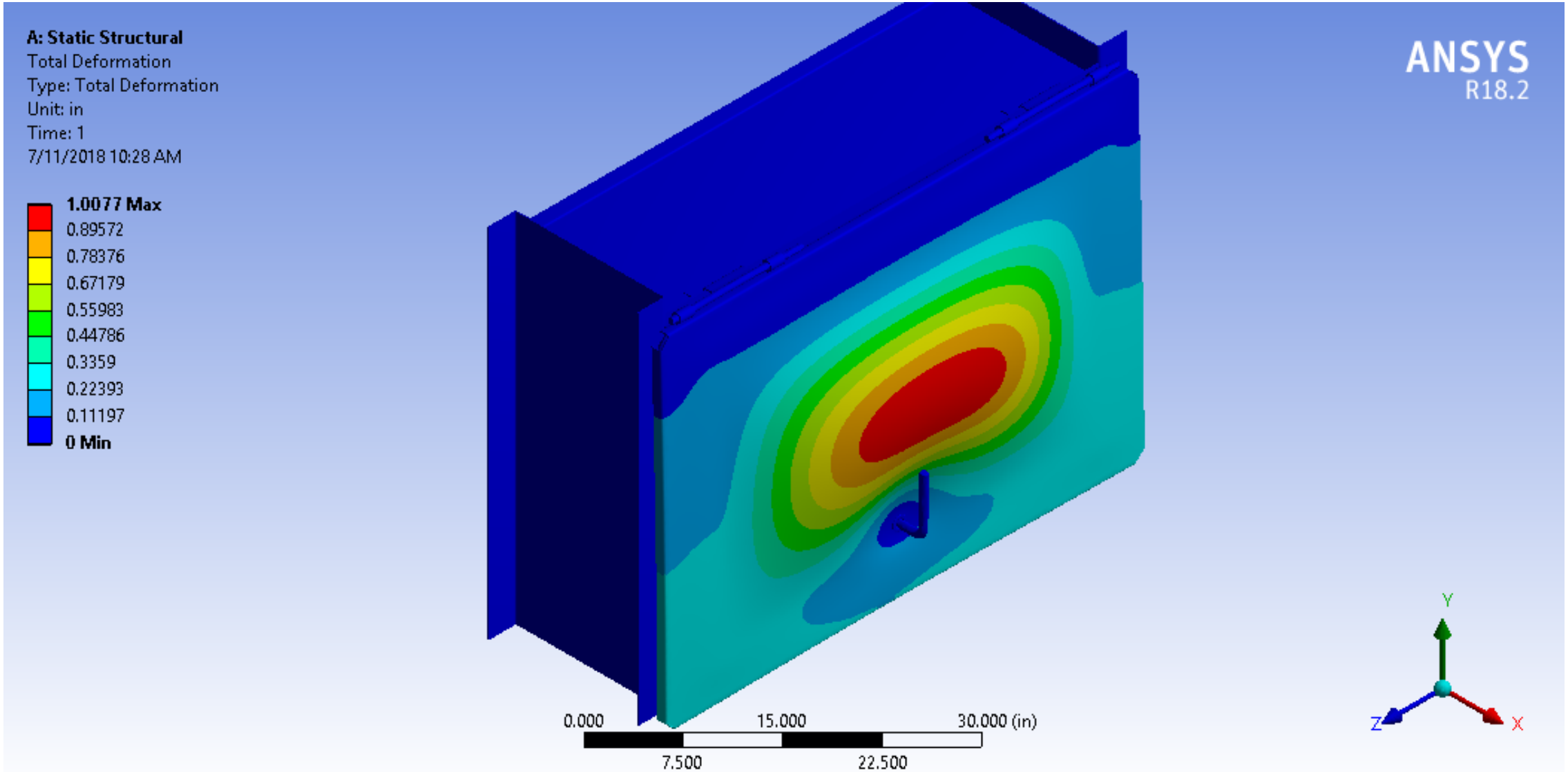

"This information is distributed solely for the purpose of pre dissemination peer review under applicable information quality guidelines. It has not been formally disseminated by the National Institute for Occupational Safety and Health, Centers for Disease Control and Prevention. It does not represent and should not be construed to represent any agency determination or policy."

For the *3-psi negative pressure*, the door skin was predicted to yield at several locations (indicated by yellow, orange, or red)

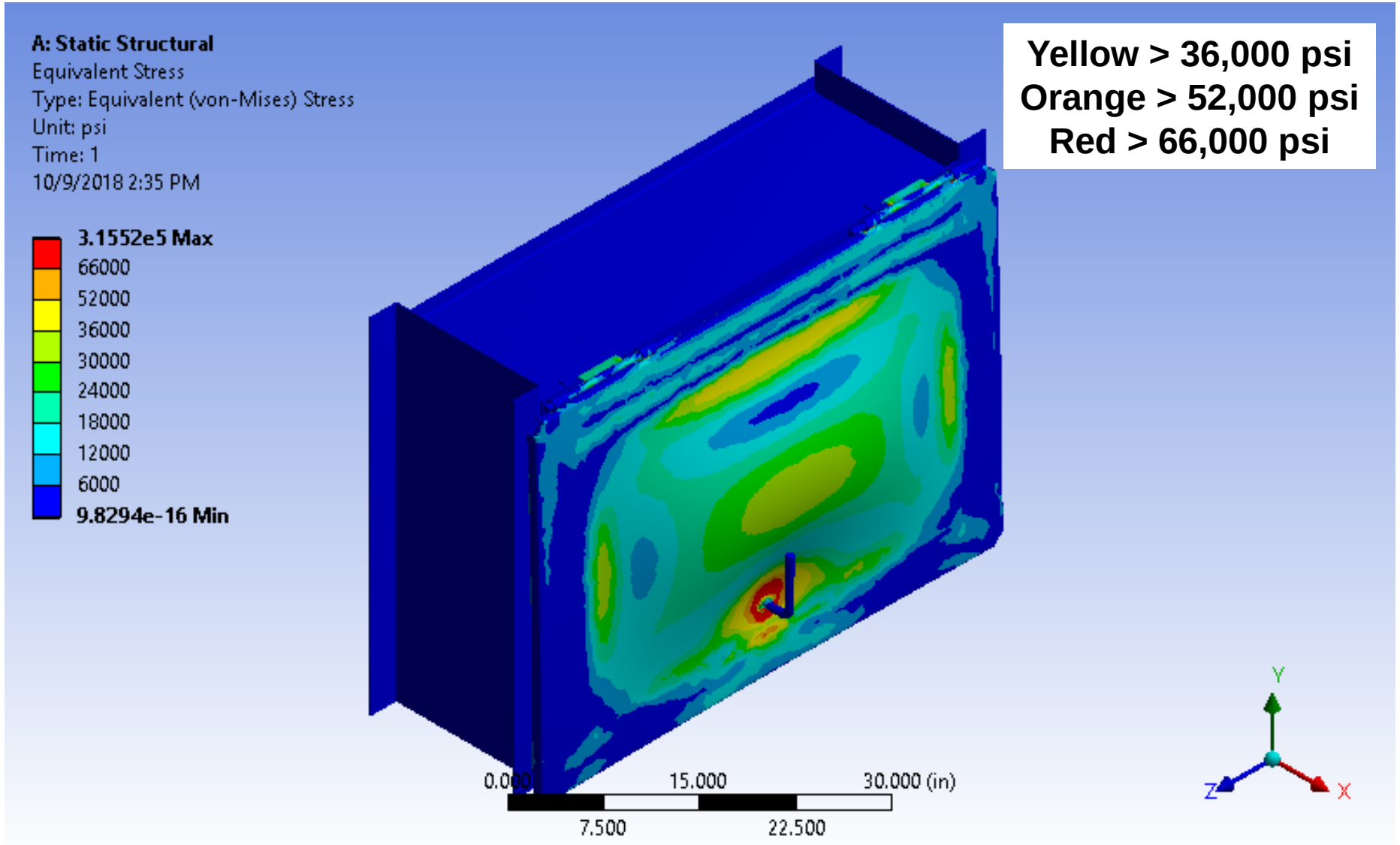

"This information is distributed solely for the purpose of pre dissemination peer review under applicable information quality guidelines. It has not been formally disseminated by the National Institute for Occupational Safety and Health, Centers for Disease Control and Prevention. It does not represent and should not be construed to represent any agency determination or policy."

For the *3-psi negative pressure*, both the latch pin and latch plate were predicted to yield

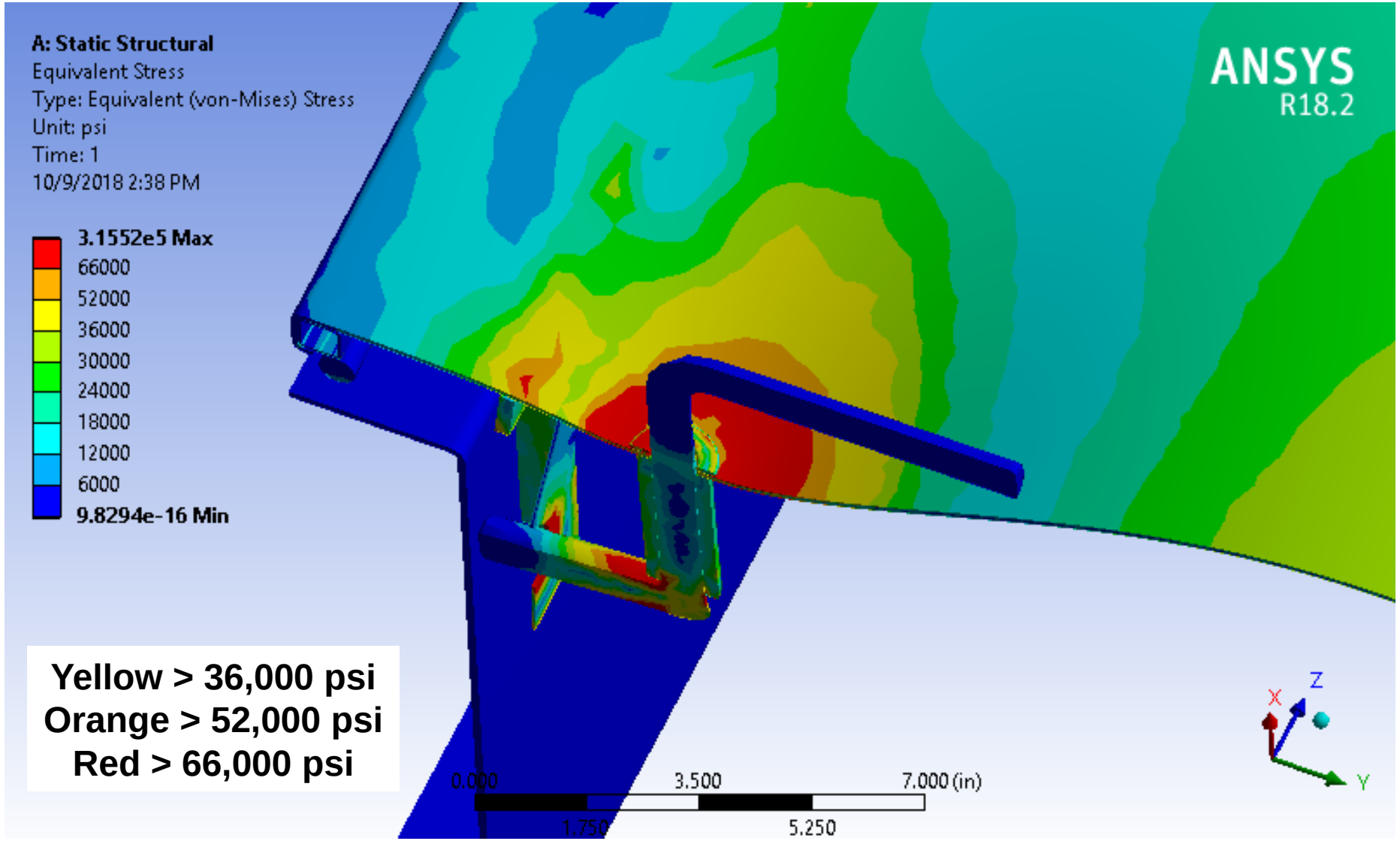

For the *3-psi negative pressure*, the hinge plates were predicted to yield

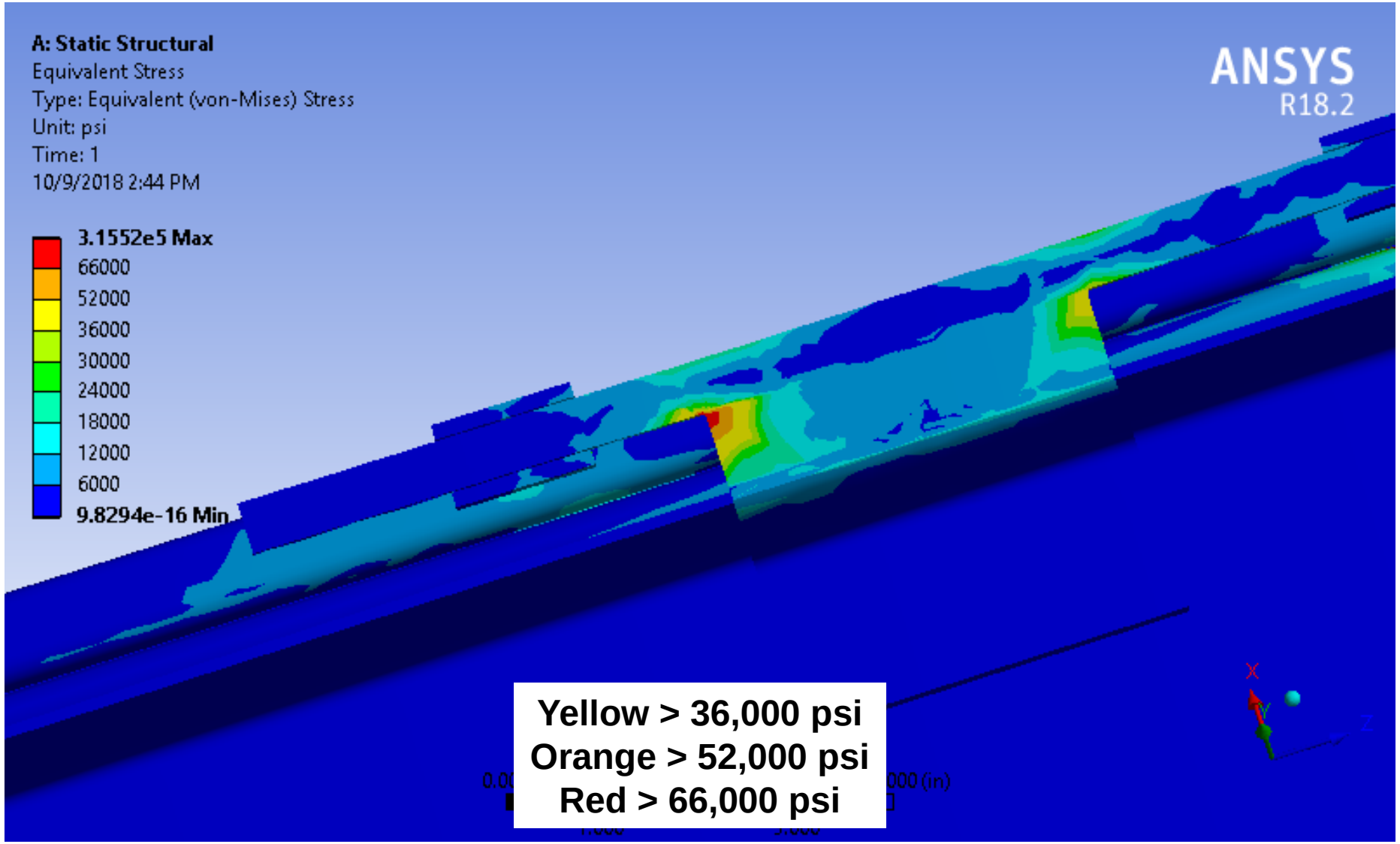

Static load-deflection-strain tests have been conducted for the purpose of improving the FE model

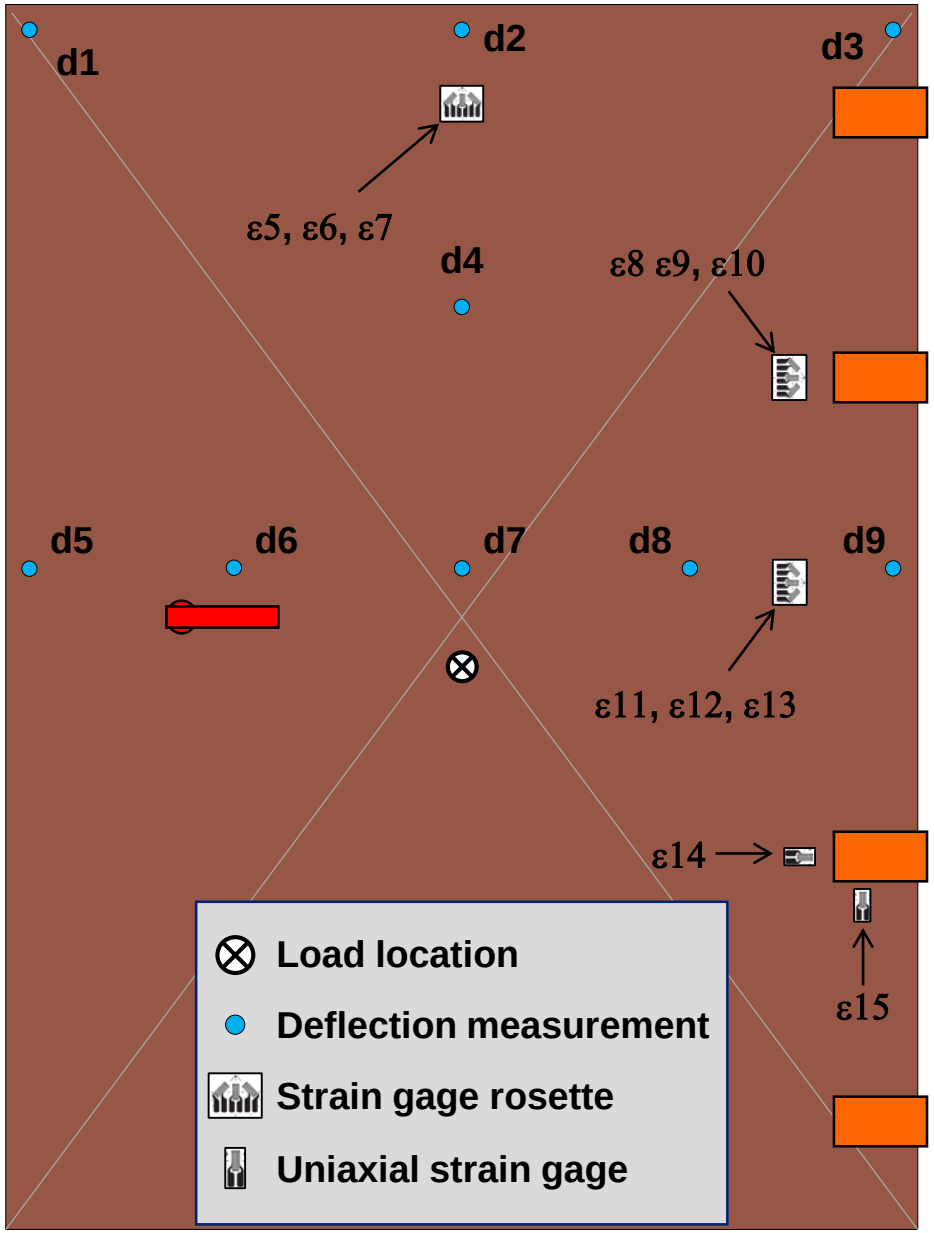

Compressive loads were applied with a hydraulic press and tensile loads were applied with a winch suspended from a gantry crane

The latch-pin strain gage pairs were calibrated to measure the latch pin loads

For tensile loads, the latch pin carries most of the applied load

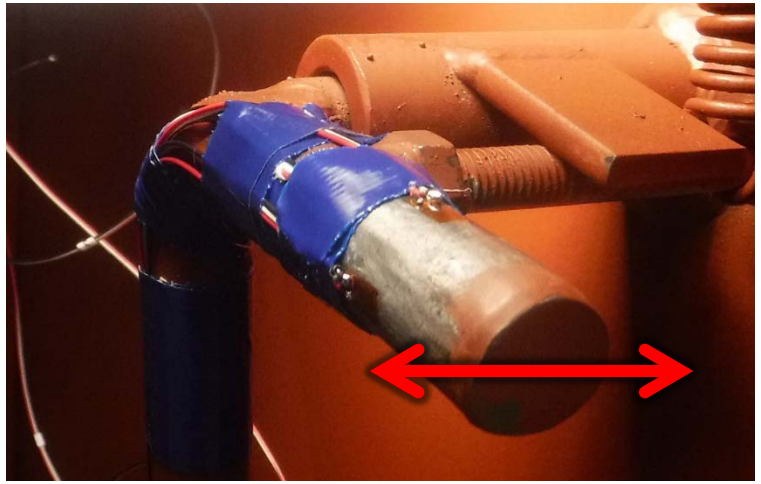

Applied Load (LB)	Latch Pin Load (LB)
0	0
25	15
50	33
75	52
100	71
125	92
150	113
200	158

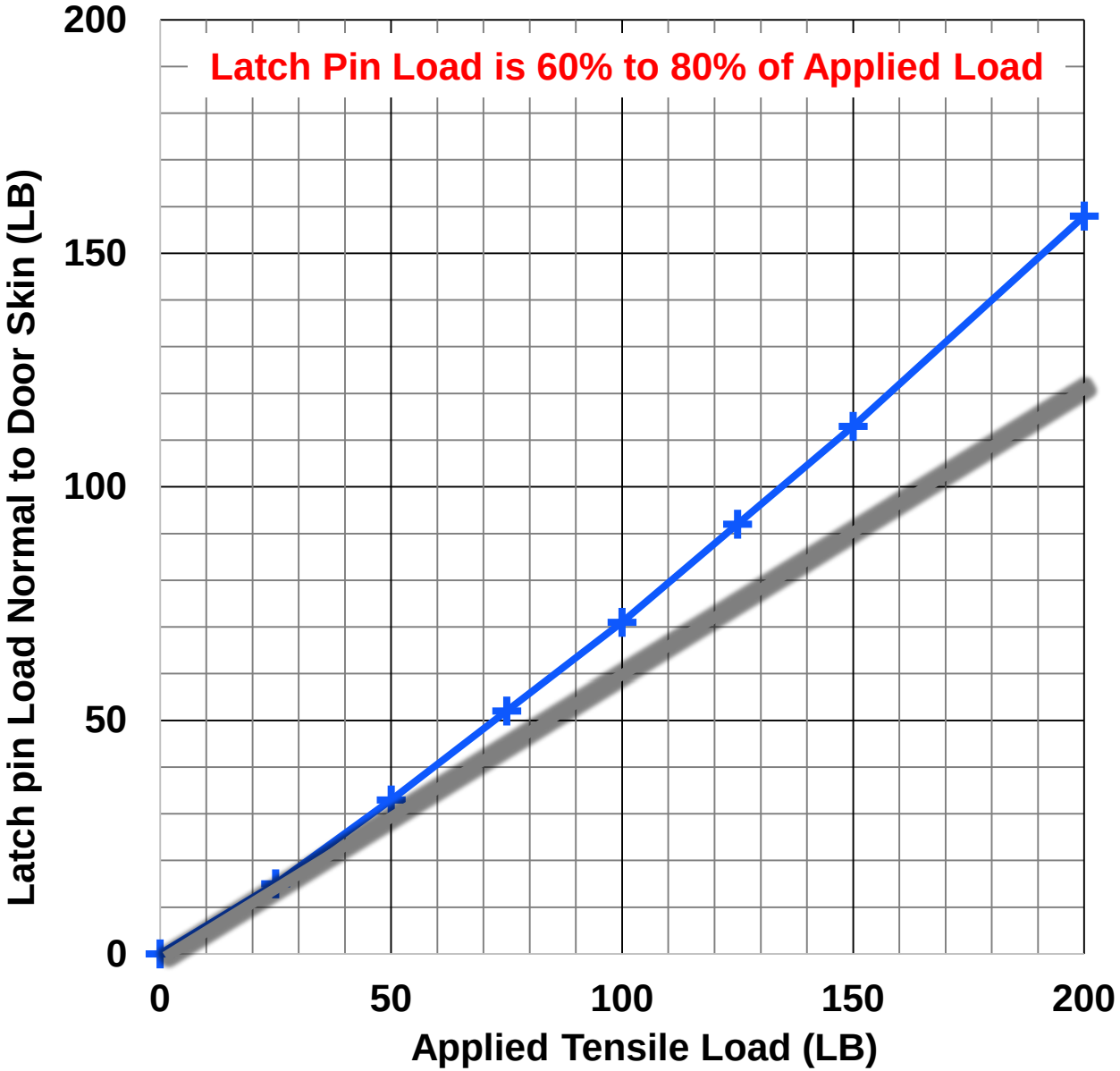

Conclusions and Future Work

- Survivable mine explosions have a variety of peak pressures and time-waveforms
- DLF can be used to scale a static test or analysis
- Blast pressure time-waveform and structural dynamics must be considered
- Door designs should be subjected to both positive and negative pressure loads
- FE results for an example BIP RA door show that yielding occurred
  - 15-psi positive pressure
  - 3-psi negative pressure
- Door skin, hinges, and latching mechanisms may need to be redesigned
- Dynamic FE analysis and testing should be performed

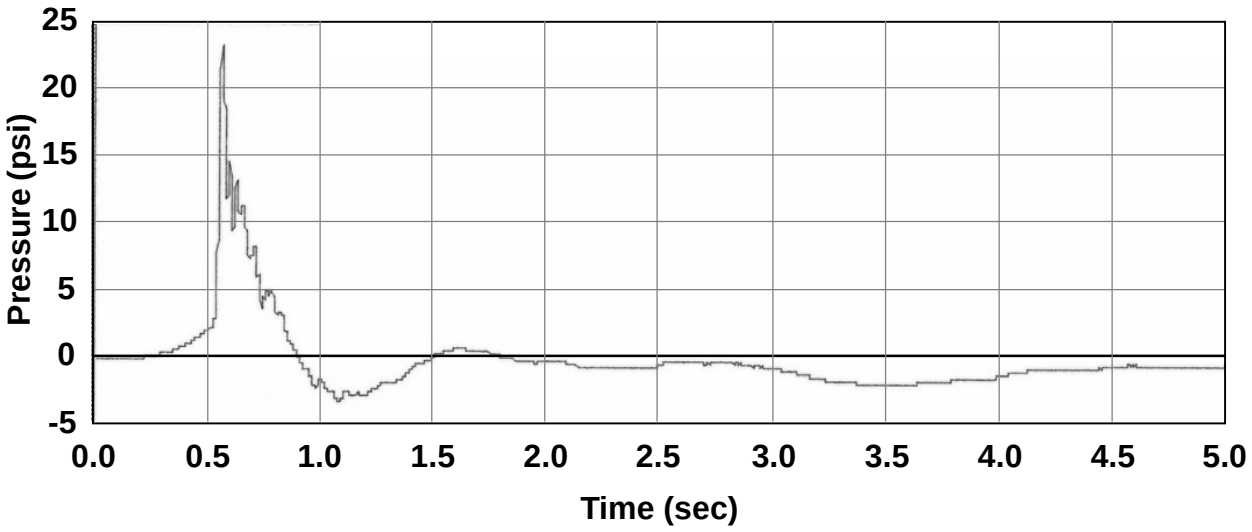

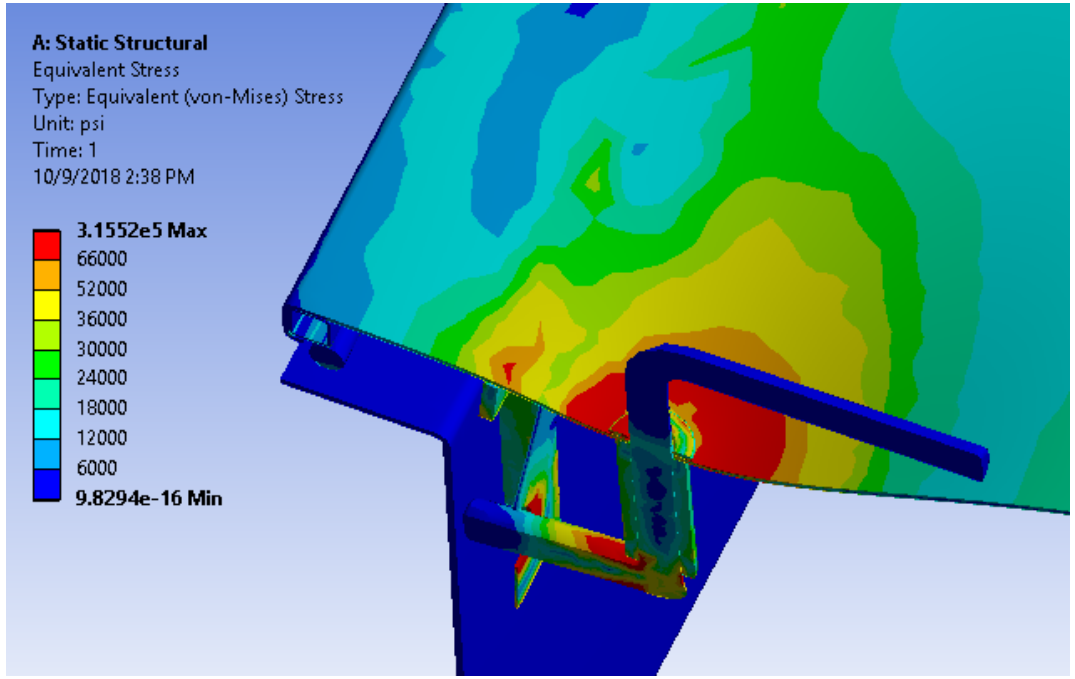

Questions?

Thank you!

Dave Yantek

DYantek@cdc.gov

412-386-4498

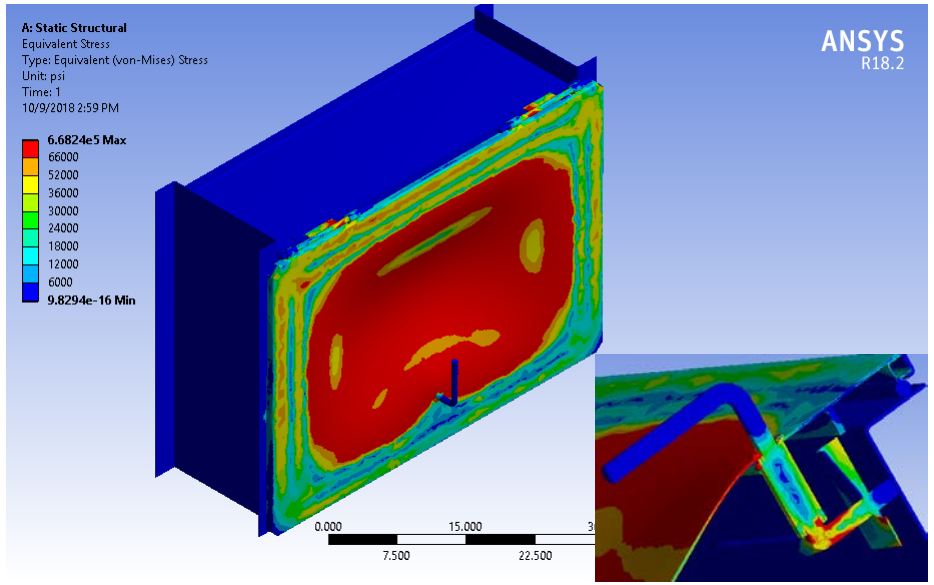

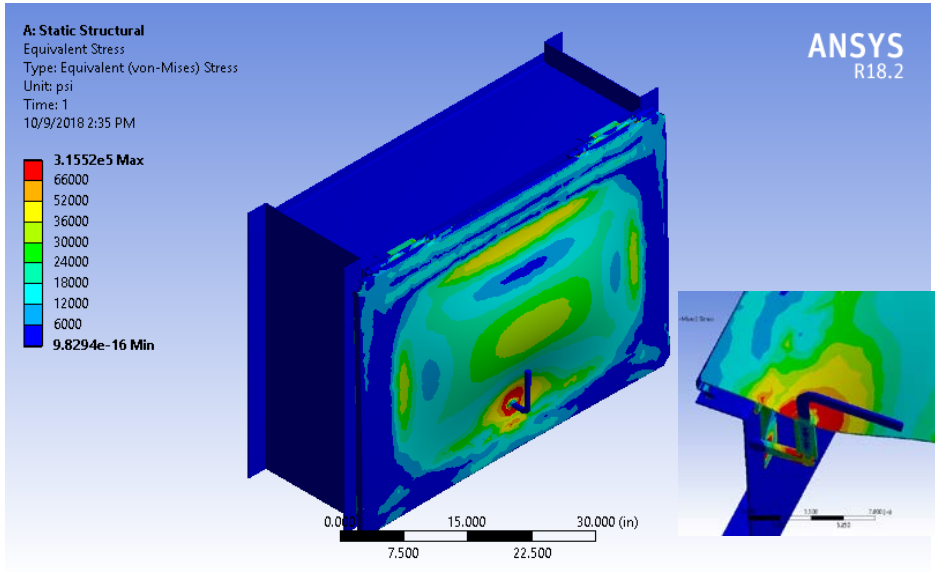

NIOSH Mining Program

www.cdc.gov/niosh/mining